LA CORNUE

Installation Guide
and
Security rules

« Broche Flamberge »

Rôtissoire

« Centenaire »

Read all instructions before using this appliance Save these instructions for future reference.

IMPORTANT SAFETY INSTRUCTION

WARNING: IF THE INFORMATION ON THIS MANUAL IS NOT FOLLOWED EXACTLY, A FIRE OR EXPLOSION MAY RESULT CAUSING PROPERTY DAMAGE, PERSONAL INJURY OR DEATH.

- Do not spray aerosols in the vicinity of the range while it is in use.
- Do not store or use combustible materials, gasoline or other

Flammable vapors or liquids in the vicinity of this or any other appliance.

- WHAT TO DO IF YOU SMELL GAS
    - Do not try to light any appliance.
    - Do not touch any electrical switch.
    - Do not use any phone in your building.
    - Immediately call your gas supplier from a neighbor's phone. Follow the gas supplier's instructions.
    - If you cannot reach your gas supplier, call the fire department.
- Installation and service must be performed by a qualified installer, service agency or the gas supplier.

WARNING: NEVER use this appliance as a space heater to heat or warm the room. Doing so may result in carbon monoxide poisoning and overheating of the appliance

WARNING: NEVER cover any slots, holes or passages in the appliance bottom or cover an entire rack with mate-rials such as aluminum foil. Doing so blocks airflow through the appliance and may cause carbon monoxide poisoning. Do not use aluminum foil to line surface unit drip bowls, except as suggested in the manual. Improper installation of these liners may result in a risk of electric shock, or fire.

This book contains many important safety messages.
Always read and obey all safety messages.
Installer: Leave these instructions with the appliance

In Case of Fire

Do not use water on grease fires. Never pick up a flaming pan. Turn the controls

off. Smother a flaming pan on a cooktop burner by covering the pan completely with a well fit-ting lid or baking tray. If available use a multipurpose dry chemical or foam-type fire extinguisher.
Open doors and windows or if a hood is fitted turn it on to remove smoke and odor.

To Prevent Fire or Smoke Damage

Before using the appliance make sure all the packing materials have been removed. Always keep the area around the appliance free from combustible materials, gasoline, and other flammable vapors and liquids.
If the appliance is installed near a window, proper precautions should be taken to prevent curtains from blowing over the burners.

NEVER leave any items on the appliance. The hot air may ignite flammable items and may increase pressure in closed containers, which may cause them to burst. Many aerosol-type spray cans are **EXPLOSIVE** when exposed to heat and may be highly flammable. Avoid their use or storage near an appliance.

Many plastics will burn and most are damaged by heat. Keep plastic items away from parts of the appliance that may become warm or hot. Do not leave plastic items on the appliance as they may burn, melt or soften if left too close to a vent or a lighted burner.

- Proper Installation - Be sure your appliance is properly installed and grounded by a qualified technician.

  The installation of your La Cornue appliance must conform with local codes or, in the absence of local codes, in the USA with the "National Fuel Gas Code", ANSI Z223.1NFPA 54, latest edition, and, in Canada, with CAN/CGA - B149.1, and CAN CGA - B149.2, “Installation Code for Gas Burning Appliances”.

  The appliance must be electrically installed and grounded in accordance with local codes or in the absence of such codes with the latest edition of the “National Electrical Code”, ANSI/NFPA 70 in the USA, and CSA C22.2 “Canadian Electrical Code” - in Canada.

  Important - Save the installation instructions for the local electrical inspector’s use.

- This appliance is designed for domestic cooking only. Use for any other purpose could invalidate any warranty or liability claim.

- The appliance and its individual shutoff valve must be disconnected from the gas supply piping system during any pressure testing of that system at test pressures in excess of 1/2 psig (3.5 kPa).

- The appliance must be isolated from the gas supply piping system by closing its individual manual shutoff valve during any pressure testing of the gas supply piping system at test pressures equal to or less than 1/2 psig (3.5 kPa).

- The inlet gas supply pressure to the appliance must be within the following limits

Type of gas	Inlet pressure		Manifold pressure
Natural gas	10’’WC maximum (2,49 kPa)	6’’WC minimum (1,49 kPa)	5’’WC (1,24 kPa)
Propane gas	13’’WC maximum (3,24 kPa)	12’’WC minimum (2,99 kPa)	11’’WC (2,74 kPa)

- Purchaser of this appliance must post in a prominent location instructions to be followed in the event the user smells gas. This information shall be obtained by consulting your local gas supply company.

- The use of a gas cooking appliance results in the production of heat and moisture in the room in which it is installed. It is essential that the kitchen where your appliance will be installed has excellent ventilation to the outside for steam and combustion gases removal. Keep natural ventilation holes open or install a mechanical ventilation device, (mechanical extractor hood).

- Prolonged intensive use of the appliance may call for additional ventilation, for example opening a window, or more effective ventilation.

- Do not obstruct the flow of combustible and ventilation air

- Leak testing of the appliance shall be conducted according to the manufacturer's instructions.

- A manual valve must be installed in an accessible location in the gas line external to the appliance for the purpose of turning on or shutting off gas to the appliance.

- **Electrical Grounding Instructions**
  To avoid risk of electrical shock, personal injury, or death, make sure your appliance has been properly grounded and always disconnect it from main power supply before servicing.

- **Power failure** - In the case of prolonged power failure no attempt should be made to operate the appliance during power failure.

- **Wear Suitable Clothing** - Never wear loose-fitting or hanging clothes while using the appliance. Be careful when reaching for items stored in cabinets over the appliance. Flammable material could be ignited if brought in contact with a burner flame or hot surface and may cause severe burns.

- **Use Only Dry Potholders or Oven Gloves** - Moist or damp potholders on hot surfaces may result in burns from steam. Never let a potholder touch hot heating elements.
  Do not use a towel or other bulky cloth in place of a glove. They might catch fire if they touch a hot surface.
  Use dry oven gloves when applicable - using damp gloves might result in steam burns when you touch a hot surface. Never operate the appliance with wet hands.

- **Do Not Leave Children Alone** - Children should not be left alone or unattended in area where appliance is in use. They should never be allo-wed to sit or stand on any

part of the appliance.

Do not allow children to climb or play around the appliance.

Teach them not to play with controls or any other part of the appliance.

Destroy the carton and plastic bags after unpacking the appliance. Never allow children to play with packaging material.

Do not store items of interest to children in cabinets above an appliance or in appliance - children climbing on the appliance to reach items could be seriously injured.

- **Do not use the appliance for storage** - This instruction manual is based on safety considerations. Flammable materials should not be stored in an appliance or near the burner. This includes paper, plastic and cloth items, such as cookbooks, plastic ware and towels, as well as flammable liquids. Do not store explosives, such as aerosol cans, on or near the appliance. Flammable materials may explode and result in fire or property damage.

- **Storage should not be installed directly above an appliance.**

- **Do not touch burner, areas near burner or interior surfaces of appliance** - Gas burner may be hot even if they have been off for some time. Areas near the gas burner and interior surfaces may become hot enough to cause burns. During and after use, do not touch, or let clothing touch or other flammable materials contact the burner, areas near the burner or interior surfaces until they have had enough time to cool.

- **User Servicing** - Do not repair or replace any part of the appliance unless specifically recommended in the manual. All other servicing should be referred to a qualified technician. Never modify or alter the construction of the appliance by removing levelling legs, panels, wire covers, screws, or any other part of the product.

- **Important Safety Notice and Warning** - The California Safe Drinking Water and Toxic Enforcement Act of 1986 (Proposition 65) requires the Governor of California to publish a list of substances known to the State of California to cause cancer or reproductive harm, and requires businesses to warn customers of potential exposures to such substances.

  This appliance contains or produces a chemical or chemicals which can cause death or serious illness and which are known to the state of California to cause cancer, birth defects or other reproductive harm. Users of this appliance are hereby warned

  that the burning of gas can result in low-level exposure to some of the listed substances, including benzene, formaldehyde and soot, due primarily to the incomplete combustion of natural gas or liquid petroleum (LP) fuels. Properly adjusted burners will minimize incomplete combustion.

Exposure to these substances can also be minimized by properly venting with an open window or using a ventilation fan or hood.

To reduce the risk from substances in the fuel or from fuel combustion make sure this appliance is installed, operated, and maintained according to the instructions in this booklet.

- **Quality of Flames** - On Natural Gas the burners' flames should be a blueish color with, at most, a slight yellowish fringe. On Propane gas the flames may be "softer". The burner flames may have a slight yellowish tip.

  If the flame burns with a long white tip you should call for service. MAKE SURE THE FLOW OF COMBUSTION AND VENTILATION AIR TO THE APPLIANCE IS UNOBSTRUCTED.

- **IMPORTANT: Never keep pet birds in the kitchen or in rooms where the fumes from the kitchen could reach. Birds have a very sensitive respiratory system. Fumes released due to overheated cooking oil, fat, margarine and overheated non-stick cookware may be harmful.**

- **All parts of the appliance become hot** with use and will retain heat even after you have stopped cooking.
  Take care when touching appliance, to minimize the possibility of burns, always be certain that the controls are in the OFF position and that it is cool before attempting to clean the range.

- **Clean with caution**. If a wet sponge or cloth is used to wipe spills on a hot surface, be careful to avoid steam burns. Some cleansers can produce noxious fumes if applied to a hot surface.

  In the interests of hygiene and safety the appliance should be kept clean at all times as a build up in fats and other food stuff could result in a fire.

- Always keep combustible wall coverings or curtains etc. a safe distance away from your appliance.

- When using an electrical appliance near the rotisserie, be sure that the cord of the appliance does not come into contact with the rotisserie.

- Take care that no water seeps into the appliance.

- This appliance is designed for cooking foods only and must not be used for any other purpose.

- This appliance is heavy, take care when moving it.

- When the appliance is not in use ensure that the control knobs are in the off position.

The Broche Flamberge “Centenaire”

Dear *Customer,*

Thank you for choosing a La Cornue product. We hope that you will derive tremendous enjoyment from cooking delicious meals with it.

The aim of this document is to make you familiar with the potential provided by a professional quality product designed for individuals, and to facilitate its maintenance.

Above all, a La Cornue product is manufactured using noble and pure materials. The choices made for some components, such as brass for the burners and cast-iron for the gas simmering plate, are the result of criteria of technicality and professional performance, which are not attainable with other materials or protective treatments. We are very much attached to the authenticity of our products and we are convinced that you will appreciate them even more as you use them.

In order to make sure that you will be satisfied with your product for a long time, we recommend that you follow the advice given in the “User 's Instructions” section of this document.

Thank you for choosing us, Kind regards,

President

Dear Customer,

Please complete the appliance details below and keep them safe for future reference - this information will enable us to accurately identify your particular appliance and help us to help you. Filling this in now will save you time and inconvenience if you later have a problem with your appliance. It may also be of benefit to keep your purchase receipt with this leaflet. You may be required to produce the receipt to validate a warranty field visit.

Appliance Serial Number*:	
Model*:	
Color:	
Fuel Type*:	
Voltage*:	
Retailers Name & Address:	
Date of Purchase:	
Installers Name & Address:	
Date of Installation:	

* This information is on the appliance data badge.

If you have a problem

In the unlikely event that you have a problem with your appliance, please refer to rest of this booklet and Instruction for Use and Upkeep, first to check that you are using the appliance correctly.

If you are still having difficulty, contact your retailer.

HEADQUARTERS AND WORKSHOP
14, rue du Bois du Pont - Z.I. Les Béthunes
95310 SAINT OUEN L'AUMONE
POSTAL ADDRESS:
BP 99006 - 95070 Cergy Pontoise Cedex FRANCE
Phone: +33 (0)1 34 48 36 36
Fax: +33 (0)1 34 64 32 65
www.lacornue.com
e-mail : a.table@la-cornue.com

CONTENTS

IMPORTANT SAFETY INSTRUCTION 1

"LA BROCHE FLAMBERGE" 11

DESCRIPTION 11

1. GENERAL 11
2. DIMENSIONS 12

INSTALLATION 14

1. SAFETY PRECAUTIONS 14
2. ELECTRICAL SUPPLY 15
3. GAS SUPPLY 15

CONNECTION 17

1. ELECTRICAL CONNECTIONS 17
2. GAS CONNECTION 17

MOUNTING 20

1. NICHE 20
2. ROTISSERIE INSIDE THE NICHE 21
3. WALL FIXATION 22

FUNCTIONING 23

1. IGNITION – BROCHE FLAMBERGE GAS 23
2. OPERATION OF THE RODS 23
3. POSITIONING OF THE RODS 24
4. HOW TO USE THE VARIOUS ROD 25
5. COOKING 25
6. CLEANING 26
7. IMPORTANT 27

MAINTENANCE 28

1. IMPORTANT 28
2. ELECTRICAL DIAGRAM 29

IGNITION - ADJUSTMENTS 30

1. TESTS 30
2. ADJUSTMENTS 30
3. INJECTOR REPLACEMENT 31

WARRANTY (5 YEARS) 33

“LA BROCHE FLAMBERGE”

"ON DEVIENT CUISINIER, MAIS ON NAÎT RÔTISSEUR"

“COOKING CAN BE LEARNED, BUT ROTISSERIE COOKING IS AN INNATE SKILL”

This dictum, scrupulously believed by the Chaîne de Rôtisseurs (guild of rotisserie cooks), demonstrates all the difficulties and subtleties of cooking on a spit.
Certain absolute principles of this type of ancestral cooking mode must be respected in order to achieve outstanding results.

DESCRIPTION

1. GENERAL

The "Broche Flamberge" is a rotisserie from the "La Cornue" line, designed for com-bustible or non-combustible built-in installation. It consists mainly of a heating source (gas burner) and an electrical motor for the rotisserie.

It is delivered with the following accessories:

- 2 Flat Rods (Spit),
- 1 English - style Rod,
- 1 Drip Tray.

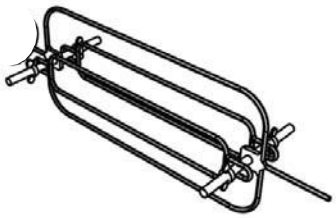

1 : English-style rod

2 :Flat rod (Spit))

The “Broche Flamberge” is available only as a gas model:

- Gas model, ref. BFG- -00UCT, for use with either natural or propane gas.

The following table outlines the nominal electrical power and gas input ratings of the model BFG Broche Flamberge.

	Model BFG- -00UCT
Electrical Power	5.5 Watts (120 V a.c.)
Natural Gas Input Rating	Pressure 5" W.C. 27,000 BTU/hr
Propane Gas Input Rating	Pressure 11" W.C. 25,000 BTU/hr

2. DIMENSIONS

Broche Flamberge

- Height : 28.5'' (725 mm)
- Width : 29.7'' (755 mm)
- Depth : 15'' (380 mm)
- Weight : 132 lbs (60 kg)

Frame

- Height : 31.2'' (792 mm)
- Width : 32'' (815 mm)

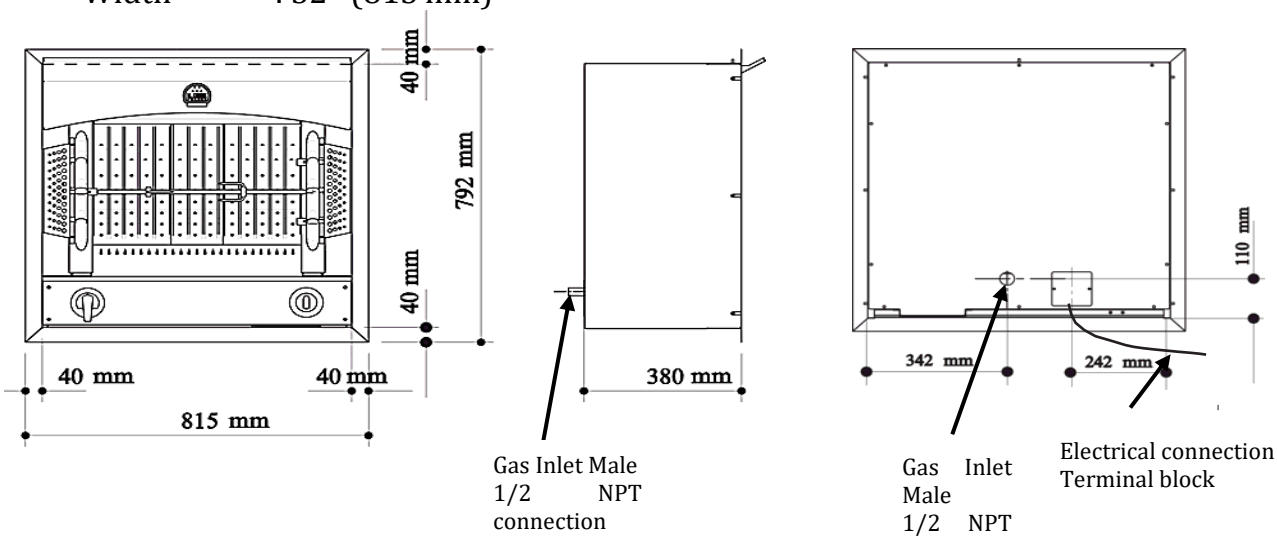

Built-in opening

- Height: 28.7" (730 mm) minimum - 30” (760 mm) maximum
- Width : 30" (760 mm) minimum - 31.5” (800 mm) maximum
- Depth : 19" (480 mm) minimum

Minimum distance from the floor to the bottom of cut-out opening = 38.4 in. For installation in either combustible or non combustible locations.

Minimum clearances from combustible or non combustible construction 0 inches.

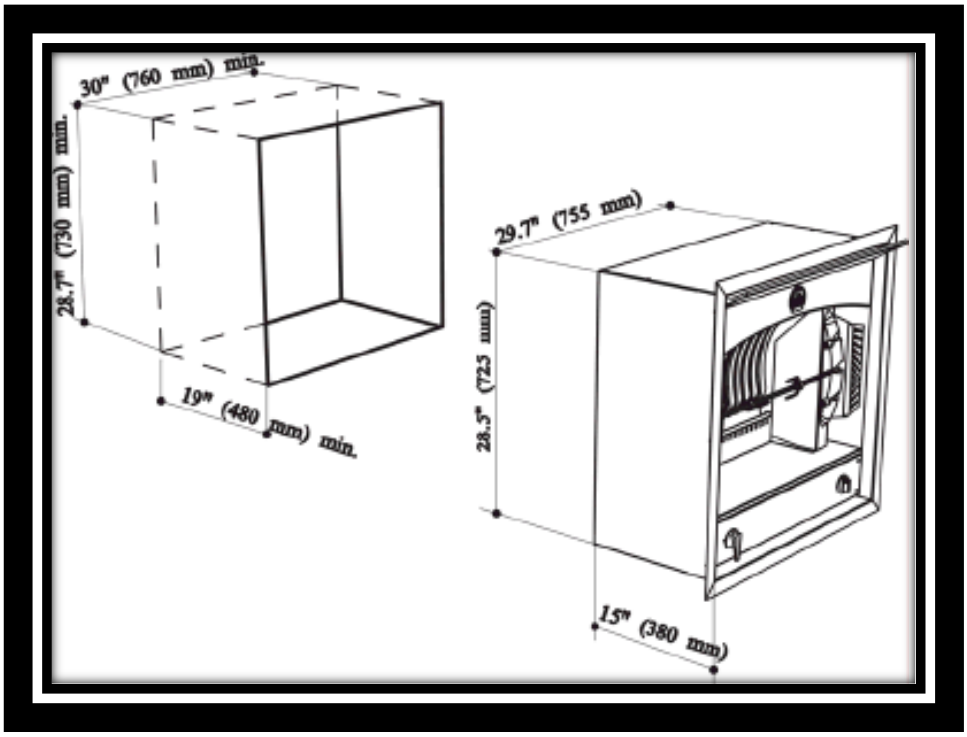

INSTALLATION

In order to be able to install your Broche Flamberge as soon as it is delivered, you must ensure an appropriate preparation of your kitchen, as well as adequate gas and electrical power (15.5 W, 120 V a.c.).

1. SAFETY PRECAUTIONS

1.1. Venting

The use of a gas cooking appliance results in the production of heat and moisture in the room in which it is installed. It is essential that the kitchen where the "La Cornue" rotisserie will be installed has excellent ventilation to the outside, for vapour and combustion gases, and a fresh air inlet.
Do not use air recycling systems.
Ventilation exha

1.2. Built-in enclosure

The Broche Flamberge is designed for installation in either combustible or non-com-bustible enclosure. No combustible material should be installed in front of the applian-ce, at a distance shorter than 5 ft (1.50 m)
The dimensions of the enclosure are as follows:

- Height: 28.7" (730 mm) minimum - 30” (760 mm) maximum
- Width: 30" (760 mm) minimum - 31.5” (800 mm) maximum
- Depth: 19" (480 mm) minimum (to allow free space behind unit)

A frame will cover the outline of the enclosure with a 1.6" (40 mm) overlap at top and both sides and at the bottom. The Broche Flamberge can be fixed from the front by means of 4 screws on the frame, in a position to be determined by the installer, depen-ding on the appearance or configuration of the wall covering.

1.3. Secure Mounting inside the cabinet or built-in enclosure

To ensure rotisserie's stable position, it is recommended to fasten rotisserie unit to the cabinet or built-in enclosure. In both side panels of the Broche Flamberge there are holes 5/16" (8 mm) in diameter - see drawing below.
To access the holes, remove the front vaulted panel, which is attached to the top by pin-clip locks. Hold the front vaulted panel by lower corners with both hands and pull it out and up.
The pins will be released from clips and let the front panel out.
Position the Broche Flamberge in place and mark the location of the holes for drilling.
Predrill a pilot hole through each of the two mounting holes using a 1/8” (3 mm) drill bit. Use appropriate wall screw and anchors, if the Broche Flamberge is installed in wall enclosure. Use the wood screws if Rotisserie is installed in the wooden cabinetry.
Use the appropriate flat washers if necessary, to insure good contact between screws and the side panels. Secure the rotisserie unit with 2 mounting screws to the wall enclosure or cabinet and reinstall the vaulted panel.

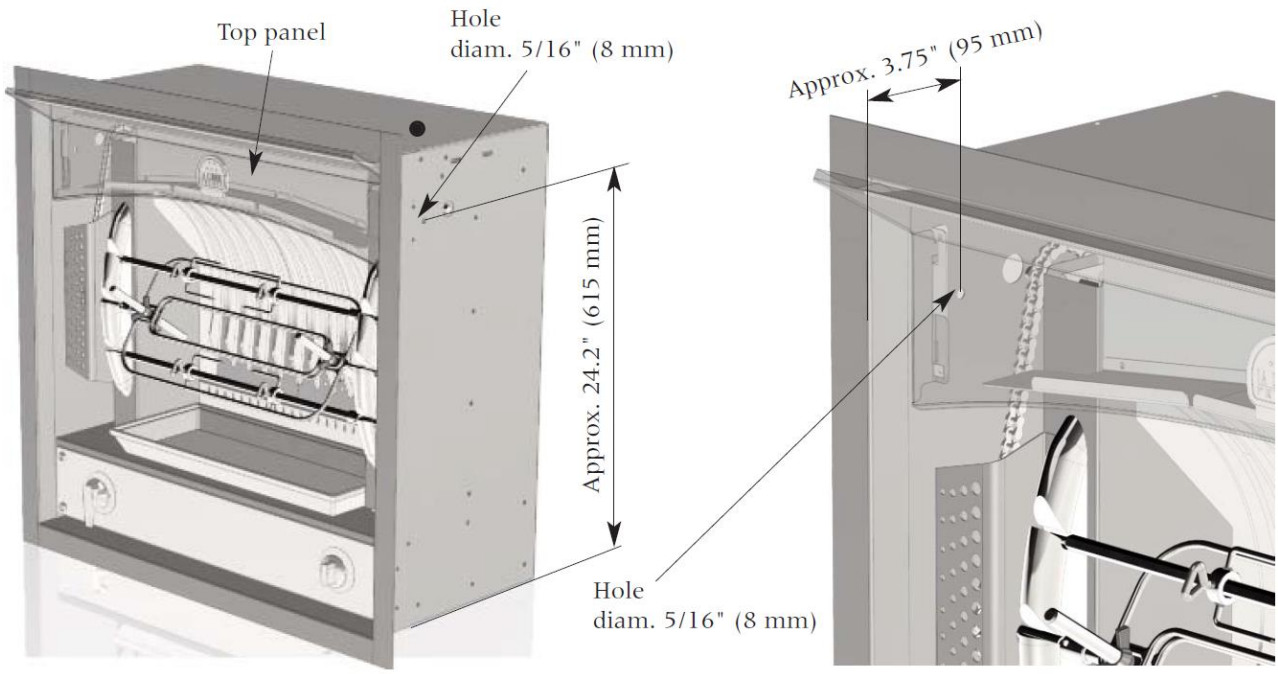

La Cornue doesn't supply the Screws. When selecting the Screws, Anchors & Dowels, respect the permitted maximum load for the screws and the type of wall structure.

1. ELECTRICAL SUPPLY

Voltage: 120 V a.c., Single Phase, 60 Hz

Safety: this appliance when installed must be electrically grounded in accordance with local codes, or in the absence of local codes, with the latest edition of the National Electrical Code, ANSI / NFPA 70 in the USA or the Canadian Electrical Code, CSA C22.2 - in Canada.

3. GAS SUPPLY

Gas is supplied to this unit by means of a 1/2" diameter pipe.

Use sealing compound on all pipe joints. Compound used must be resistant to the action of LP Gases.
The gas supply line to the appliance must be at least the same size as the gas inlet. **An easily accessible manual shutoff valve** must be installed, keeping in mind the fact that on the appliance, the gas inlet is located at the back:

NOTE:
Make sure that the supply line is clear of burrs and metal particles in order to avoid damage to the gas controls once the gas is turned on. The pipe connections can then be made

When your "La Cornue" appliance is installed between kitchen cabinets, the manual shutoff valve should be accessible. We recommend it be located at the rear of an adjacent cabinet.

According to gas regulations, any opening in the wall or on the floor for gas supply of the appliance must be properly sealed as well as any circulation of air between the gas supply room and the kitchen.

When all the work has been carried out on your gas supply network, ensure that no metallic burr can enter the supply tube of the stove and block the burners. Then make sure that all gas connections are properly sealed.

Refer to "Important Safety Information".

After all work has been completed on your gas supply network, an operating test must be performed before connecting the Broche Flamberge, in order to ensure that no metallic particles may enter the supply tube and obstruct the burner. The gas supply piping system must be tested as shown in page 3 of this guide.

CONNECTION

1. ELECTRICAL CONNECTIONS

The appliance must be electrically installed and grounded in accordance with local codes or in the absence of such codes with the latest edition of the "National Electrical Code", ANSI/NFPA 70 in the USA, and CSA C22.2 "Canadian Electrical Code" - in Canada.

Disconnect all power supply circuits before accessing the junction boxes.

The Broche Flamberge is supplied with a connection terminal block accessible by unscrewing the stainless-steel protection plate on the backside.

This appliance must be supplied with 120 Volt and 60 Hz frequency, and connected to an individual, properly grounded branch circuit, protected by a circuit breaker or time-delay fuse. Circuit Breaker size chosen to meet local codes according to max electrical power of 15.5 Watts (0.13 Amps).

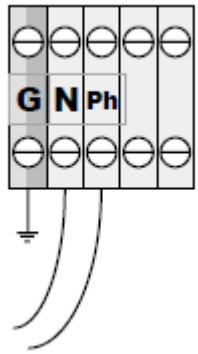

120 V a.c. / single phase

G-Ground = Green
N-Neutral = White
Ph-Phase (Hot) = Black

Wiring must conform to National Electric Codes.
If the electric service provided does not meet the above specifications, have a licensed electrician install an approved outlet.

Because rotisserie terminals are not accessible after appliance is in position, flexible service conduit or cord must be used. The appliance can then be easily disconnected for servicing.

REMINDER: connection to the general power supply must be via terminal blocks (preferably of the self-shearing type), not by means of plugs.
Fix the cable way below the hot air outlets, at the back of the Broche Flamberge, never in front of them.

2. GAS CONNECTION

The installation of your La Cornue appliance must conform with local codes or, in the absence of local codes, in the USA with the "National Fuel Gas Code", ANSI Z223.1, latest edition, and, in Canada, with CAN/CGA - B149.1, and CAN CGA - B149.2, "Installation Code for Gas Burning Appliances".

All La Cornue appliances are fully assembled and equipped for use with the type of gas shown on the rating plate of the appliance.

If no special instructions were mentioned upon ordering, the rotisserie is fitted with orifice for natural gas.

Prior to installation, ensure that the local distribution conditions (type of gas and gas pressure) are compatible with rating plate supplied on appliance.

The rotisserie is designed to operate at a manifold pressure of 5'' of Water Column on natural gas, or a manifold pressure of 11'' of Water Column on LP gas (Propane).
If the rotisserie is to be used on LP gas, a qualified LP installer must convert it.
We recommend that the rotisserie be converted before installation.

For proper operation, the pressure of natural gas supplied to the regulator must be between 6'' and 10'' of water column.
For LP gas, the pressure supplied must be between 12'' and 13'' of water column.

When checking for proper operation of the regulator, the inlet pressure must be at least 1'' greater than the operating (manifold) pressure as given above.

The pressure regulator located at the inlet of the rotisserie manifold must remain in the supply line regardless of whether natural or LP gas is being used.

A flexible metal appliance connector used to connect the rotisserie to the gas supply line should have an I.D. of ½'' and be 5 feet in length for ease of installation.
The outlet pressure of the gas regulator is factory set and must not be altered.

For the rotisserie the regulator and the pressure tap can be found at the bottom of the rotisserie, behind the front cover.

Connect the Rotisserie to the Gas Supply

Shut off the main gas supply valve before disconnecting the old appliance and leave it off until the new hook-up has been completed. **Don't forget to relight the pilot on other gas appliances when you turn the gas back on (i.e. gas water heater).**

Because hard piping restricts movement of the appliance, the use of a CSA International certified flexible metal appliance connector is recommended unless local codes require a hard piped connection.

Never use an old connector when installing a new appliance. If the hard piping method is used, you must carefully align the pipe; the rotisserie cannot be moved after the connection is made. To prevent gas leaks, put pipe joint compound on, or wrap pipe thread tape with yellow Teflon* around, all male (external) pipe threads.
**Teflon: Registered trademark of DuPont*
NOTE: if joint compound is used compound must be neutral to the action of LP gas.

Install a manual gas line shut-off valve in the gas line in an easily accessed location outside of the appliance. Make sure everyone operating the appliance knows where and how to shut off the gas supply to the appliance.

CONNECTION

Connect flexible metal appliance connector to the gas inlet of the rotisserie. Position rotisserie to permit connection at the shut-off valve.
When all connections have been made, make sure all rotisserie controls are in the off position and then turn on the main gas supply valve.

Use a liquid leak detector at all joints and connections to check for leaks in the system. Use a product specifically manufactured for leak detection. Leak testing of the appliance shall be conducted in accordance to the manufacturer's instructions.
NOTE: do not use open flame to check for gas leaks.

Do not route the hose, at the back, in front of or near a hot air outlet from the rotisserie or any other heat source.
The hose must not be pinched or kinked.

The appliance must be connected to the type of gas shown on the rating plate of the appliance.

The gas supply line must be at least a 1/2 inch pipe.

On all pipe joints use sealing compound that does not react to LP gas.

Check gas leaks by using a liquid leak detector.

Do not use an open flame

NOTE : Propane gas cylinders must never be located inside your home.

INSTALLER

Leave this manual with the appliance and advise the customer to keep it for future reference. Inform the consumer of the location of the as shut-off valve.

MOUNTING

1. NICHE

Screw the four enamelled facades onto the niche as shown in the diagrams below.

For the side facades, use the bottom hole of the fixing lug to screw the facade on the niche

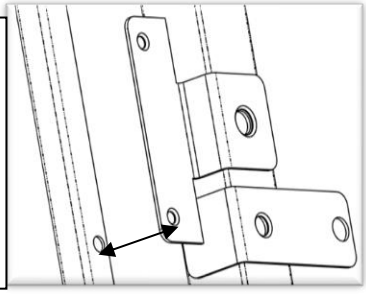

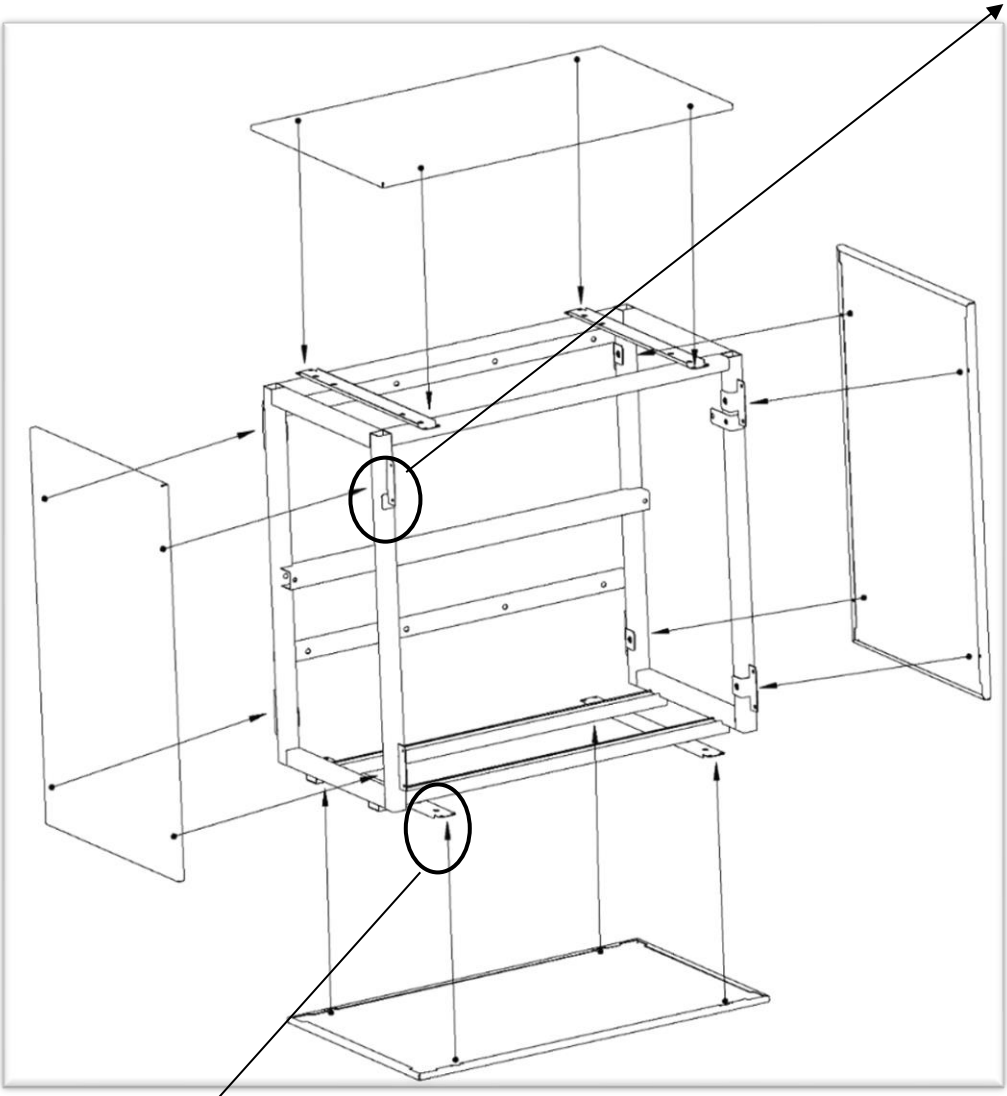

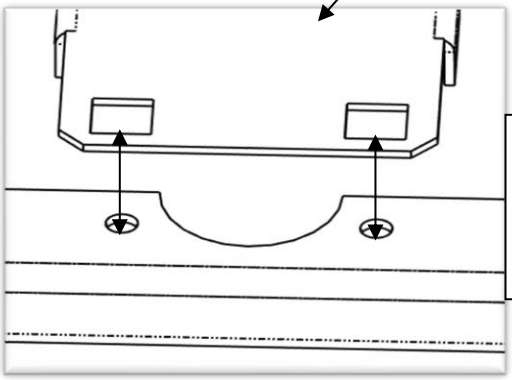

For horizontal facades, use the two fixing holes of the structure

2. ROTISSERIE INSIDE THE NICHE

Insert the « Broche Flamberge » into the frame as shown in the diagram on the right

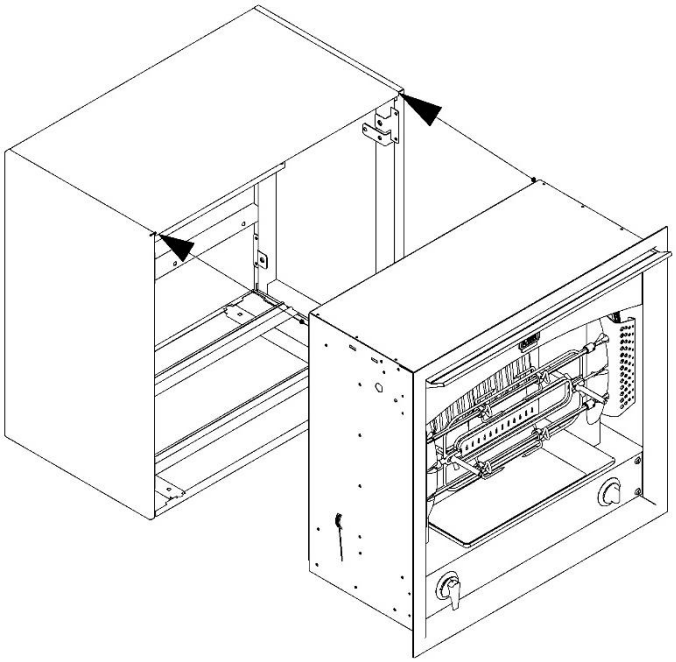

Unclip the cap of the « Broche Flamberge » by pulling lightly on with both hands to access the hole for fixing the pin on its frame.

Screw the « Broche Flamberge » pin on both sides to secure it to the frame.

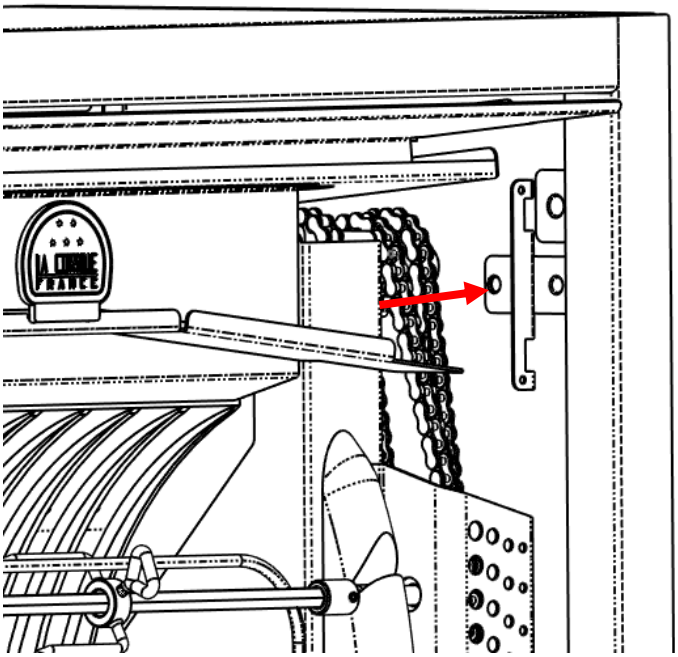

3. WALL FIXATION

It is advisable to remove the “Broche Flamberge” as well as the enamelled facades of the niche in order to secure and facilitate this operation.

Using a spirit level, mark on the wall the various drilling holes that will be used to screw the frame of the “Broche Flamberge” pin against the wall.
The fixing holes are located at the bottom of the chassis, they are spaced horizontally 220 mm and vertically 490 mm.

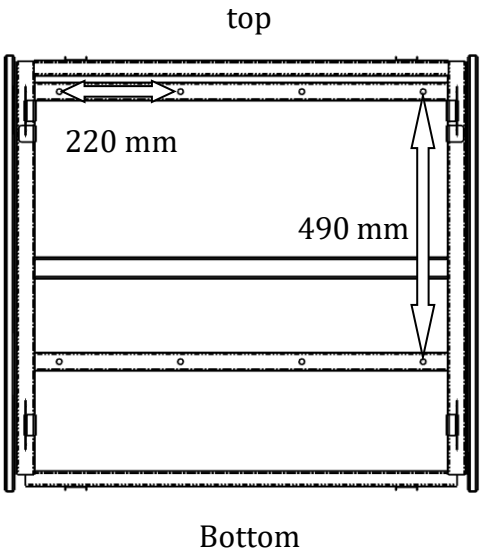

Secure the frame to the wall using 8 flat head screws with wall anchors (not included).

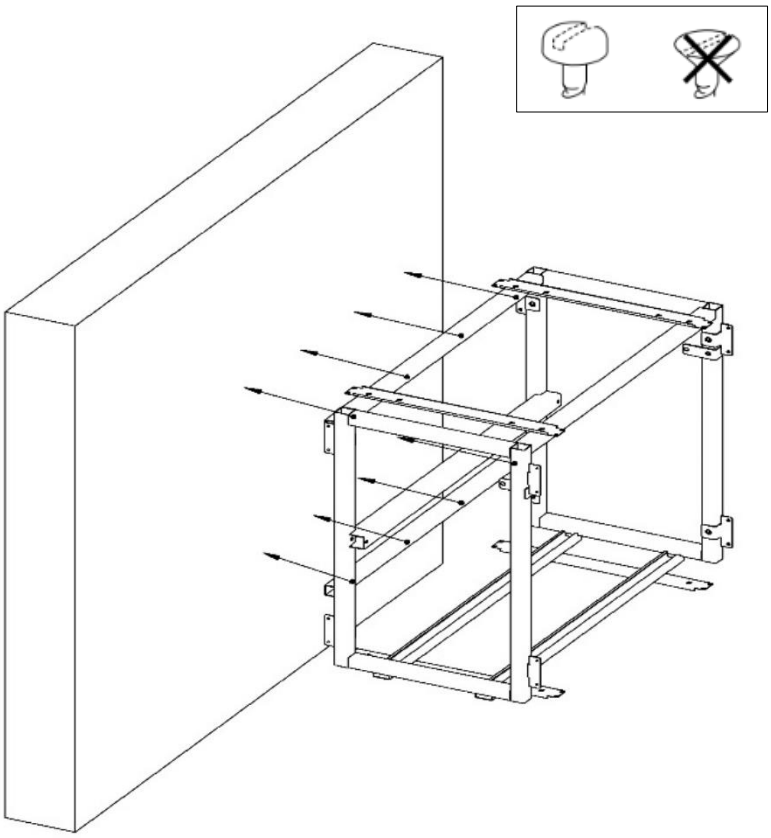

FUNCTIONING

1. IGNITION – BROCHE FLAMBERGE GAS

The gas model of the Broche Flamberge includes a safety valve with a thermocouple: if the burner goes off accidentally, gas supply will be cut off automatically after a few seconds.

To ignite the gas burner: press the control knob (left side) and rotate it counter clockwise, to the "big flame" position. The gas at the burner ignites automatically. Keep the knob pressed in for 10 to 15 seconds, or longer if necessary (up to 30 seconds on new equipment); then release the knob burner should stay on.
The sparking noise means that the ignition system is operating normally.

- Low setting: this is achieved by rotating the knob fully counter clockwise (small flame).
- Shutoff: bring the knob back to its vertical position by rotating it to the right.

If the burner flame goes out, wait 1 - 2 minutes and repeat the above procedure but keep the knob pressed down for a few more seconds (when the system is new, it takes a little longer for safety devices to function normally).
Release the knob.

Rotate knob to the "HIGH" position. You will need to preheat 5 to 10 minutes before you place the food to be cooked.

2. OPERATION OF THE RODS

Lift the switch on the right-hand side (position 1 “ON”) of the rotisserie to start driving the motor.
Position 0 - “OFF”.

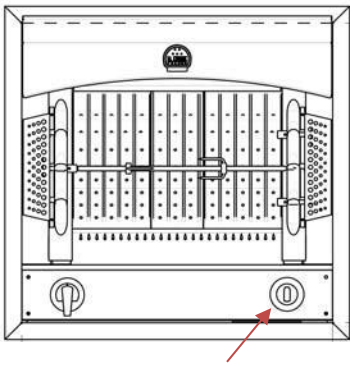

3. POSITIONING OF THE RODS

The Flamberge is equipped with three rod holders. Insert tip of the rod into one of rod holders depen-ding on type of food to be broiled. It is recommended to center the roasts on the rod. You can use the 3 cooking levels independently and vary the cooking temperature by more or less dis-tancing the roast from the heat source.	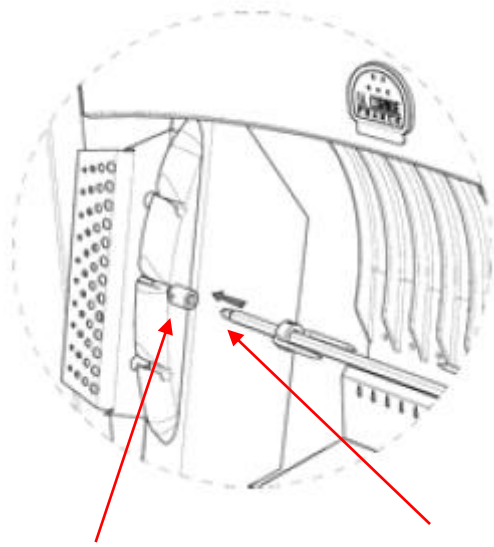

The rods position can be adjusted in order to increase/reduce the distance between the burner/radiant cast-iron back and the rods:

In order to increase the distance between the burner/radiant cast-iron back and the rods: pull the rod support - this position is generally adequate for large joints of meat or poultry on one main rod.
In order to reduce the distance between the burner/radiant cast-iron back and the rods: push the rod support toward the burner/radiant cast-iron back.

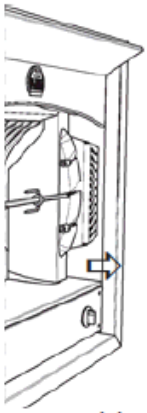
Support position 1

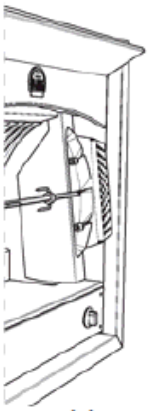
Support position 2

Support position 3

Warning: the rod supports are very hot - always use oven gloves or oven mitts.

4. HOW TO USE THE VARIOUS ROD

Rod should not be loaded with more than 22 lbs (10 kg)

All types of meat that can be put on a spit, such as chicken, turkey, duck, hare, etc…should be supported by flat rod. Secure the meat with the forks supplied to that end. For red meat, or sides that are difficult to balance on the rod, use the English rod.

3 : English - style Rod

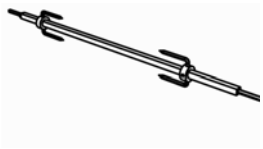

4 : Flat Rod (Spit)

5. COOKING

White meat, such as poultry, veal, pork, can be placed in the rotisserie without preheating it.

For red meat, such as joints of beef or lamb, **it is recommended to preheat the rotisserie** for about 5 - 10 minutes, before placing the roast. This will ensure that the outside of the meat will be properly sealed.

To cook a chicken, duck or pigeon, for example, run a spit through it, then place it on the middle disc. Check the distance of your supports: a free-range chicken, which takes longer to cook, should be placed farther from the heat source. The cooking time for a chicken varies, on average, between 45 and 60 minutes. Use the same method for duck or pigeon.

If you wish to roast two large ducks or cockerels, use both spits and place them on the upper and lower discs. Check that the wings are secured and that the two spits do not come into contact with each other when rotating.

When cooking larger pieces of meat, such as rack of lamb, whole fish and other roasts, fix them between the central tongs; you can sprinkle them with herbs, lemon slices or spices, to taste.
It only requires twenty minutes to cook a loin of lamb or a beautiful bream. To sear your dish and keep it rare and juicy, turn up the heat.

Whatever your menu, the rotisserie is always a festive and mouth-watering spectacle, that will have your guests coming back for more. Don’t forget to place a dish underneath the spits.

6. CLEANING

Clean appliance regularly, including special rotisserie surfaces, with recommended cleaning agents.
The cooking grease should be removed from all cooking surface and tray every time the appliance is used, to avoid any risk of fire.

Front Panels

The external parts, which are not exposed to fat splatters, only require a minimum effort to keep them clean and beautiful. The level of cleaning really depends on the frequency of use and the environmental climate. If kept in a holiday home, especially in a marine climate, it should be thoroughly cleaned before your departure. And isn't it nice to return to a spark-ling clean cooker.

Due to the damp environment, the salt in the air and the acidity in the fat attack all metals, even solid brass and stainless steel.

The cleaning products should be chosen according to the surfaces to be cleaned.

- Bright colored enamel fronts

Because the enamel is vitrified, you can use a window-cleaning product on a paper towel.

As fat may splash and splatter when a rotisserie overheats, use an "Ajax Cream" type product and a sponge for cleaning. Enhanced results can be obtained by using window cleaning products.

- Stainless steel front panel

For routine cleaning, use terebenthine or domestic alcohol on a piece of paper towel. Every three to six months, give your brushed steel front panel a thorough cleaning to remove grease.

For this type of in-depth cleaning, use a mild detergent or soft soap, thoroughly diluted in hot water. Then rinse with clean water.

A finishing touch with terebenthine will eliminate all traces of water and detergent.

- Matt enamelled colored fronts (matt black, pebble grey)

Remember that matt colors are fragile by nature.

Matt colors are not vitrified and are therefore not protected: the use of products that are too powerful can leave irrecoverable marks.
However, we have been applying this finish for many years now, as it is extremely easy to clean and maintain. Simply follow our instructions.

Clean in lukewarm water using household soap applied to a non-abrasive sponge or even better why not use domestic soap in gel form. Then rinse in pure water and dry carefully with a paper towel.

Finishes

- Nickel or chrome finishes

These do not require any particular cleaning. Simply use a window-cleaning product applied to absorbent paper or a cloth to remove any finger marks.

- Copper or Brass finishes

Use a special copper cleaning product, in paste or liquid form, and a soft cloth.
Then remove all traces with a damp sponge. By removing product deposits with water, your rotisserie stay shinier, longer.

We recommend “Copper Cleaner” from “Spring” or “Bistrot Cuivre” from “Matfer”.

Avoid the use of anti-oxidation products, which cause black deposits to form on the appliance and take twice as long to clean off.

7. IMPORTANT

It is recommended not to touch the bunches of ceramic, as this may damage them.

MAINTENANCE

1. IMPORTANT

- Keep appliance area clear and free from combustible materials, gasoline and other flammable vapours and liquids.
- Do not obstruct the flow of combustion and ventilation air
- Contact the factory representative to perform maintenance and repairs.
- Clean appliance regularly, including special rotisserie surfaces, with recommended cleaning agents.
- Disconnect power supply to the appliance before servicing.
- All adjustments have been made in the factory to ensure optimum results.

IMPORTANT

This equipment is design-certified by a Nationally Recognized Testing Laboratory to the appropriate National Standards as indicated on the Equipment Rating Plate. Any modification without written permission of the La Cornue Company voids the certification and warranty of this equipment.

Your selection of LA CORNUE equipment is your assurance of quality and dependability that reflects over 100 years of experience in manufacturing the finest gas cooking equipment. You can always rely on your dealer and the Company to stand behind every product anywhere in the U.S.A. For additional equipment, service and information contact your dealer.

2. ELECTRICAL DIAGRAM

"CAUTION - Label all wires prior to disconnection when servicing controls. Wiring errors can cause improper and dangerous operation."
"Verify proper operation after servicing."

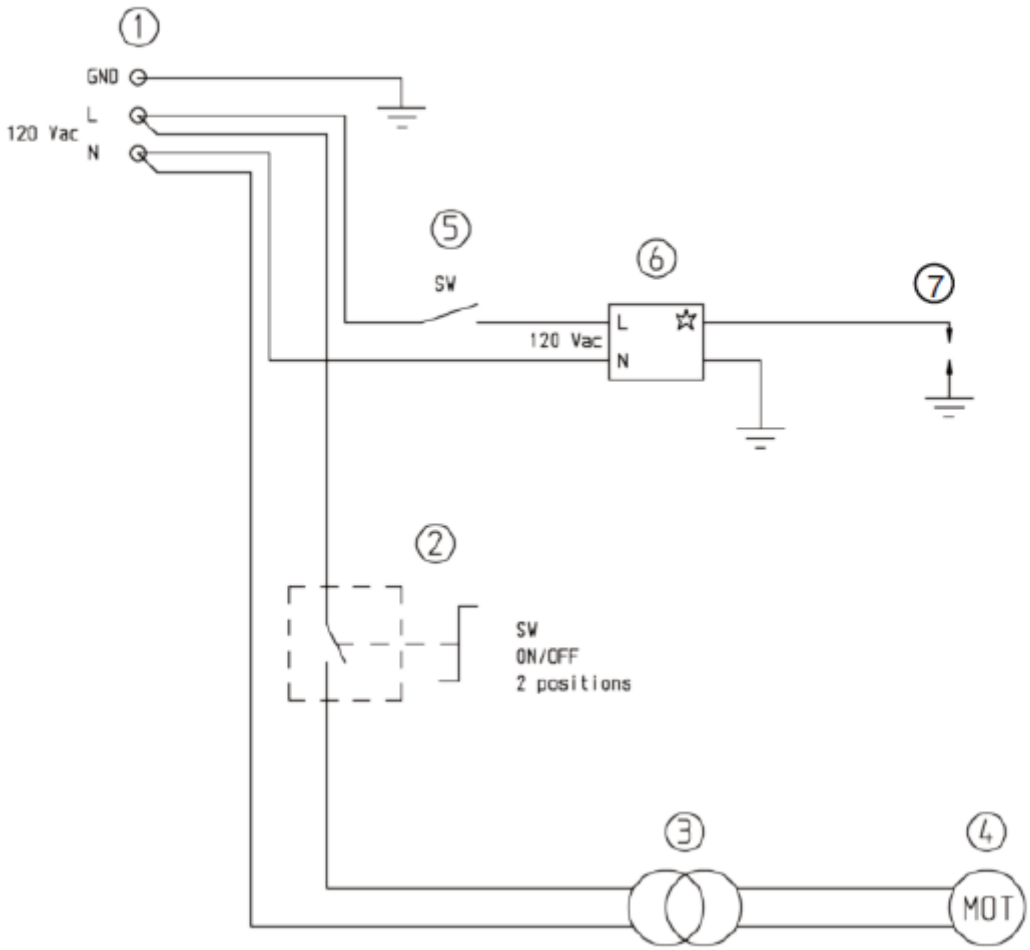

N°	Quantity	Designation
1	1	Terminal Block
2	1	Motor Swith
3	1	Transformer 120V / 230 V
4	1	Motor 15,5W
5	1	Spark Microswitch
6	1	Spark ignition module
7	1	Spark ignition electrode

IGNITION - ADJUSTMENTS

1. TESTS

The “Broche Flamberge” gas spit is equipped with an automatic burner ignition and with a safety valve with thermocouple: if the burner should accidentally go out, the gas supply is automatically shut off after a few seconds.

The thermocouple should not be activated for more than 15 seconds; if, after this time, the burner has not ignited, you should stop trying to ignite, and wait at least one minute before trying to reignite the burner.

To ignite the spit, proceed as follows:

- Push in the control knob and turn it to the left to the “high flame” position. The burner is automatically ignited.
-Keep the control knob pressed in for between 5 to 10 seconds (on first igniting the spit, the safety thermocouple may take longer to react, without however exceeding 15 seconds). A “tick-tick” noise means that the ignition system is operating normally.
-To turn down the flame (“low flame”), turn the knob to the left as much as possible or put it head downwards.
-To switch off the flame, turn the knob to the vertical position turning it to the right.

In case the burner flame is accidentally turned off, close the burner control knob and do not turn on the burner for at least one minute.

When the rotisserie is used for the first time, there may be a slight smell of “newness”; this will disappear in time.

2. ADJUSTMENTS

To ensure an optimal setting, all adjustments are made before the appliance leaves the factory. However, after changing the injector for use with a different type of gas supply, the “low” flame setting should be adjusted.

Replacing the injectors and changing the settings should both be carried out by a qualified professional.
After any intervention on the gas circuit (adjustments, injector replacements, etc.) the system should be checked for gas sealing tightness, according to cur- rent standards.

The "low flame" setting of the burner can be modified by the following procedure:

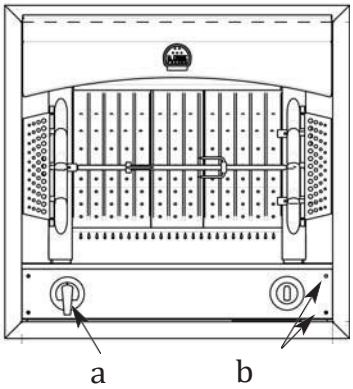

1. Remove the control knob by unscrewing the screw (a) which holds it in place.

2. Remove the lower plate by unscrewing the screws (b) blocking it.

3. Re-install the control knob; light the burner and turn the knob to the "low flame" position.

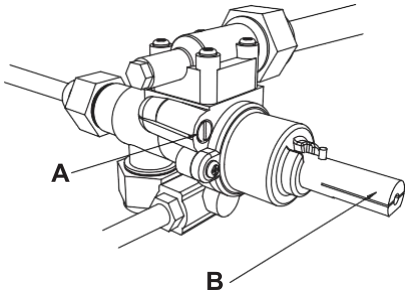

4. Remove the control knob again and using a screwdriver, turn the slotted screw (A) located on the body of the tap (B) **to the left to increase** the gas flow or **to the right to reduce** it. Re-install the knob to switch off the burner.

Comment: the flame height must not be more than a third of the height of the hearth.

5. Re-install the lower plate and the control knob, tightening the appropriate screws.

Warning: Make sure that there is enough space between the knob and the lower plate to allow the knob to be pressed down before turning when lighting the burner.

3. INJECTOR REPLACEMENT

All by-pass screw and injector replacements and adjustments should be carried out by a qualified professional.

The burner injector reference differs according to the type of gas and country of installation.

The following table indicates which injectors should be used following a change in the gas supply or a house move.

		Flamberge burner
Input rating (BTU/hr)	Natural gas 5"WC (1,24kPa)	27 BTU/hr
	Propane gas 11"WC (2,74kPa)	25BTU/hr
Orifices sizes (Marking)	Natural gas 5"WC (1,24kPa)	2,50mm 250
	Natural gas 5"WC (2,74kPa)	1,45mm 145
Reduced Flow rate By-pass	Natural gas 5"WC (1,24kPa)	96
	Propane gas 5"WC (2,74kPa)	96

The injectors are always replaced in the following sequence:

1. To access the injector, remove the rear cover from the “Broche Flamberge” spit by unscrewing the retaining screws.

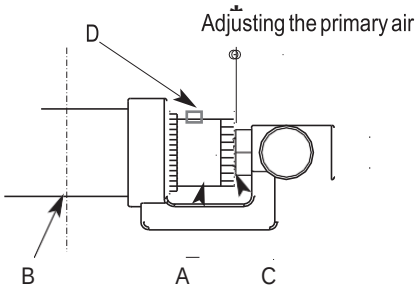

2. Screw the adjusting cone (A) and insert it into the mixing tube (=hose) (B) in order to free sufficient space to unscrew the injector.
3. Unscrew the injector (C) using a N° 7 flat wrench or eye wrench.
4. Insert the injector corresponding to the new gas supply and screw it in.
5. Ignite the burner and adjust the air inlet by screwing or unscrewing the adjusting cone (A) as described in the table on page 16 until you obtain a slightly blue flame showing no separation: separation of the flame indicates that there is too much air.
6. Then block the adjusting cone with the clamp-screw (D).

The injector is easier to access and adjustements are easier to make if the rod holders are at the maximum « Out » position.

If the appliance is to be used with a new type of gas and/or a new pressure, then a new label should be applied, detailling the new settings, as well as the new type of gas to be used with the new injectors.

Any seals should be replaced.

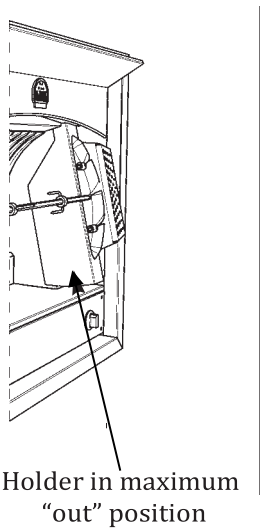

WARRANTY (5 YEARS)

La Cornue company warrants to the original user for a period of five years from date of delivery not to exceed 66 months from date of shipment by Company that the product(s) manufactured by Company are free from defects in material and workmanship.

Company shall have no obligation for any product which has been misapplied, mishandled, abused, misused or subjected to harsh chemical action, or improperly installed nor to any product modified by unqualified service personnel or damaged by flood, fire or other acts of God or which has the serial number removed or altered. Adjustments such as calibrations, leveling, tightening of fasteners or utility connections normally associated with original installation are the responsibility of the dealer or installer and not that of Company.
Warranty does not cover freight charges for new or defective parts.

The liability of Company for breach of such warranty is exclusively limited to, at Company option, the replacement or repair of any part found by Company to be not as Warranted herein and, in such event replacement or repair shall be made within 60 months from the date of installation. The Company shall bear the normal labor charges in effecting such replacement or repair, to the extent that performance is effected, within 50 miles from an office of a qualified service agency of Company except that such obligation to bear labor charges shall not apply to products or parts installed outside the United States and Canada. Replacement part(s) must be supplied by La Cornue direct or through its dealer or qualified service agency and the defective part(s) returned to same intact.

This states the exclusive remedy against Company relating to the product(s), whether in contract or in tort or under any other legal theory, and whether arising out of warranties, representations, instructions, installation or defects from any cause.

Company shall not be liable, whether in contract or in tort or under any other legal theory, for loss of use, revenue or profit, or for substitute use or performance, or incidental, indirect, or special or consequential damages, or for any other loss or cost of similar type.

This warranty and the liability set forth herein are exclusive and in lieu of all other liabilities and warranties, express or implied, including but not limited to implied warranties of merchantability and fitness for particular purpose and constitutes the only warranty of Company with the respect to product(s).

IMPORTANT INFORMATION :

When requesting information, manuals, replacement parts or service, always refer to the model and serial number of your unit. The serial plate is located behind or on the lower drawer.
For your convenience space is provided below to record this information for future reference.

SERIAL NO _____

MODEL NO _____

DEALER _____

INSTALLATION DATE _____

ATELIERS LA CORNUE
14, rue du Bois du Pont - Z.I. Les Béthunes 95310
SAINT OUEN L'AUMONE
Postal adress:
BP 99006 - 95070 Cergy Pontoise Cedex FRANCE
Phone: + 33 (0)1 34 48 36 36
Fax: +33 (0)1 34 64 32 65
www.lacornue.com
e-mail: a.table@la-cornue.com

FRANCE

Ateliers La Cornue
14, rue du Bois du Pont - Z.I. les Béthunes
95310 Saint-Ouen l'Aumône - FRANCE
Phone: + 33 (0)1 34 48 36 36 - Fax: + 33 (0)1 34 64 32 65
Postal address:
La Cornue SAS - B.P. 99006
95070 Cergy Pontoise Cedex - FRANCE

+

www.lacornue.com
e-mail: a.table@la-cornue.com

USA & CANADA

Middleby Residential
4960 Golden Parkway, Building 3A
Buford, GA 30518

After-sales Service:
of 7:00 a.m. and 4:00 p.m. Pacific Time,
Monday through Friday, excluding national Holidays
by calling 877-522-6768

LA CORNUE

Ateliers La Cornue

14, rue du Bois du Pont - Z.I. les Béthunes 95310 Saint-Ouen l'Aumône - FRANCE

Adresse postale : La Cornue SAS - B.P. 99006 95070 Cergy Pontoise Cedex - FRANCE

Phone: + 33 (0)1 34 48 36 36 - Fax: + 33 (0)1 34 64 32 65

E-mail: a.table@la-cornue.com

w w w . l a c o r n u e . com