This book contains many important safety messages.

Always read and obey all safety messages.

Installer: Leave these instructions with the appliance

Important: Save the installation instructions for the local electrical inspector's use.

La Cornue 1908

CornuFé®

www.lacornue.com

CornuFé 44 Induction Range

User Guide

&

Installation Instructions

U111136-02a

WARNING!

The anti-tip device supplied with this range must be installed when the appliance is installed. This will reduce risk of tipping of the appliance from abnormal usage or by excessive loading of the oven door.

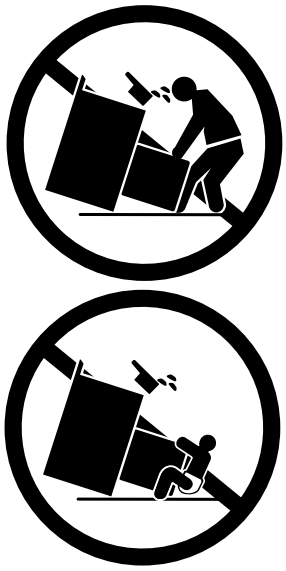

⚠WARNING!

- **ALL RANGES CAN TIP.**
- **INSTALL ANTI-TIP BRACKET PACKED WITH RANGE - SEE INSTALLATION INSTRUCTIONS.**
- **A CHILD OR ADULT CAN TIP THE RANGE AND BE KILLED.**
- **ENGAGE THE RANGE TO THE ANTI-TIP DEVICE - SEE INSTALLATION INSTRUCTIONS.**
- **RE-ENGAGE THE ANTI-TIP DEVICE IF THE RANGE IS MOVED.**
- **FAILURE TO DO SO CAN RESULT IN DEATH OR SERIOUS BURNS TO CHILDREN OR ADULTS.**

The following symbols are related to Safety and are used on the product and throughout this manual.

Meaning / Description	Symbol
WARNING / CAUTION An appropriate safety instruction should be followed or caution to a potential hazard exists.	
DANGEROUS VOLTAGE To indicate hazards arising from dangerous voltages.	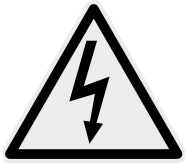
PROTECTIVE EARTH (GROUND) To identify any terminal which is intended for connection to an external conductor for protection against electric shock in case of a fault, or the terminal of a protective earth (ground) electrode.	

Meaning / Description	Symbol
HEAVY This product is heavy and reference should be made to the safety instructions for provisions of lifting and moving.	
DISCONNECT MAINS SUPPLY Disconnect incoming supply before inspection or maintenance.	

Contents

1. Important safety information 1

2. Range Overview 6

Cooktop 6
Cooktop control indications & warnings 7
The ovens 10
Accessories 13
Oven Lights 13
Storage 13
Telescopic runners *(Optional extra)* 14

3. Cooking Tips 15

4. Cooking table 16

5. Cleaning your cooker 17

To Remove Metal Rub-off 18
Control panel and oven doors 18
Ovens 18
Cleaning table 19

6. Troubleshooting 20

7. Installation Instructions 22

8. Service and parts 23

9. Installation safety instructions 24

10. Installation 25

Positioning the Range 26
Moving the Range 27
Fitting the Flue Grille 27
Lowering the Two Rear Rollers 27
Completing the Move 28
Levelling the Range 28
Fitting the stability bracket 28
Repositioning the Range Following Connection 28

11. Electrical connection 29

12. Final fitting and checks 31

Assemble the range 31
Final Checks 31
Customer Care 31
Fitting the drawer 32
Removing the drawer 32

13. Circuit diagram 33

Induction Hob 33
Oven 34

14. Technical Data 35

15. Warranty 36

1. Important safety information

Have your appliance properly installed and grounded by a qualified technician. The installation must conform with local codes or, in the absence of local codes, in accordance with the National Electrical Code ANSI/NFPA 70 or the Canadian Electric Code, CSA C22.1.

Install only as described in the installation section of this book.

Ask your dealer to recommend a qualified technician and an authorized repair service. Know how to disconnect the power to the range at the circuit breaker or fuse box in case of an emergency.

The anti-tip device supplied with this range must be installed when the appliance is installed. This will reduce risk of tipping of the appliance from abnormal usage or by excessive loading of the oven door or storage drawer.

Leaning, sitting or stepping on the doors or drawer of this range can result in serious injuries and also cause damage to the range. **DO NOT** allow anyone to climb, stand or hang on any part of the range.

Be sure your appliance is properly installed and grounded by a qualified technician.

Important safety notice and warning

IMPORTANT INFORMATION - If you are wearing a medical device (such as a pacemaker), consult your doctor. The operation of the appliance may affect a medical device.

Prior to connecting, the power cord should be inspected for any damage. In the event of damage please consult your electrical installer.

You must provide adequate clearances between the range and adjacent combustible surfaces. Refer to Installation Instructions.

Save the installation instructions for the local electrical inspector's use.

In case of fire

DO NOT use water on grease fires. NEVER pick up a flaming pan. Turn the controls off. Smother a flaming pan on a cooktop burner by covering the pan completely with a well fitting lid or baking tray. Isolate the power source, where it is safe to do so, either at the control or isolator. If available use a multipurpose dry chemical or foam-type fire extinguisher.

If fire is in an oven pan, smother by closing oven door. Open doors and windows or if a hood is installed turn it on to remove smoke and odor.

To prevent fire or smoke damage

Before using the range make sure all the packing materials have been removed.

Always keep the area around the range free from combustible materials, gasoline, and other flammable vapors and liquids.

NEVER leave any items on the range cooktop. The hot air from an oven vent may ignite flammable items and may increase pressure in closed containers, which may cause them to burst. Many aerosol-type spray cans are EXPLOSIVE when exposed to heat and may be highly flammable. Avoid their use or storage near an appliance.

Many plastics will burn and most are damaged by heat. Keep plastic items away from parts of the range that may become warm or hot. **DO NOT** leave plastic items on the cooktop as they may burn, melt or soften if left too close to a vent or a lighted burner.

Storage should not be installed directly above a range. If anything is stored above the range, it should be limited to infrequently used items, which can be safely stored in an area subjected to heat from a range. Temperatures may be unsafe for some items such as volatile liquids, cleaners or aerosol sprays.

Destroy the carton and plastic bags after unpacking the range. **NEVER** allow children to play with packaging material.

NEVER use this appliance as a space heater to heat or warm the room. Doing so may result in carbon monoxide poisoning and overheating of the oven.

NEVER cover any slots, holes or passages in the oven bottom or cover an entire rack with materials such as aluminum foil. Doing so blocks airflow through the oven and may cause carbon monoxide poisoning. Aluminum foil linings may also trap heat, causing a fire hazard.

It is recommended that this appliance is serviced annually by a qualified service engineer.

DO NOT repair or replace any part of the appliance unless specifically recommended in this User Manual. Always consult a qualified service engineer.

All other servicing should be done only by a qualified technician, this may reduce the risk of personal injury and damage to the range.

NEVER modify or alter the construction of a range by removing levelling legs, panels, wire covers, anti-tip brackets/ screws, or any other part of the product.

DO NOT leave children alone.

Babies, toddlers and young children should not be allowed near the range at any time. They should **NEVER** be allowed to sit or stand on any part of the appliance.

DO NOT allow children to climb or play around the range. The weight of a child on an open door may cause the range to tip, resulting in serious burns or other injury. Teach them not to play with controls or any other part of the range.

NEVER store items of interest to children in the cabinets above a range or on the backguard of a range; children climbing on the range to reach them could be seriously injured.

DO NOT use the oven for storage.

This instruction is based on safety considerations.

Flammable materials should not be stored in an oven, the range storage drawer or near the cooktop burners. This includes paper, plastic and cloth items, such as cookbooks, plasticware and towels, as well as flammable liquids. **DO NOT** store explosives, such as aerosol cans, on or near the appliance.

Flammable materials may explode and result in fire or property damage.

To avoid risk of electrical shock, personal injury, or death, make sure your range has been properly grounded and always disconnect it from main power supply before servicing.

DO NOT touch the cooktop cooking areas.

The marked cooking areas on the cooktop may be hot even if they have been off for some time. Areas near the cooking area may become hot enough to cause burns. During and after use, **DO NOT** touch, or let clothing touch or other flammable materials contact the cooktop or areas near the cooking area until they have had enough time to cool. These areas include the rangetop and rear vent.

DO NOT touch heating elements or interior surfaces of ovens.

Oven heating elements may be hot though they are dark in color. Interior surfaces of an oven may become hot enough to cause burns. During and after use, **DO NOT** touch, or let clothing or other flammable materials touch heating elements or interior surfaces of oven until they have had enough time to cool.

Other range surfaces that may become hot enough to cause burns are the broiler compartment and oven vent at the rear of the range.

Wear suitable clothing

NEVER wear loose-fitting or hanging clothes while using the range. Be careful when reaching for items stored in cabinets over the cooktop. Flammable material could be ignited if brought into contact with a hot surface and may cause severe burns.

Use only dry potholders or oven gloves

Moist or damp potholders on hot surfaces may result in burns from steam. **NEVER** let a potholder touch hot heating elements.

DO NOT use a towel or other bulky cloth in place of a glove. They might catch fire if they touch a hot surface.

Use dry oven gloves when applicable – using damp gloves might result in steam burns when you touch a hot surface. **NEVER** operate the range with wet hands.

Oven care

Use care when opening the door. Let hot air and steam escape before removing or replacing food (Fig. 1.1).

NEVER heat unopened food containers. Pressure build up may make container burst and cause injury.

Keep oven vent ducts unobstructed.

ALWAYS place oven racks in their desired location while the oven is cool. If a rack must be moved while the oven is hot, DO NOT let the potholders contact the heating element in the oven.

Induction care

Important information for pacemaker and implanted insulin pump users: The functions of this cooktop comply with the applicable standards on electromagnetic interference. If you are fitted with a pacemaker or implanted insulin pump and are concerned please consult your doctor for medical advice.

To fully utilize the power of your induction stove top and to ensure longevity of performance, we recommend the use of La Cornue approved Induction Pots and Pans. If you decide to purchase an alternative set of pans for use on your induction range, we would strongly recommend that composite aluminum pans with steel inserts, example shown **Fig. 1.2**, are avoided. This type of pan construction can significantly reduce the lifetime and performance of your induction cook top.

Only certain types of glass, glass-ceramic, earthenware or other glazed containers are suitable for hotplate cooking; others may break because of the sudden change in temperature. NEVER cook directly on the cooktop surface (Fig. 1.3).

DO NOT cook on a broken cooktop. If the cooktop should break, cleaning solutions and spillovers may penetrate the broken cooktop and cause a risk of electric shock. Contact a qualified technician immediately (Fig. 1.4).

Should a crack appear in the surface, disconnect the range immediately from the supply and arrange for its repair.

NEVER leave surface units unattended at high heat settings - boilover may cause residue, that may ignite.

ALWAYS LIFT pans off the cooktop. Sliding pans may cause marks and scratches (Fig. 1.5).

Take care NOT TO PLACE HOT LIDS onto the cooktop surface (Fig. 1.6). Lids that have been used to cover a hot pan can "stick" or create a "vacuum" effect to the glass top. Should this occur, DO NOT attempt to lift the lid off the glass surface, this may damage the glass. Instead slide the lid to the edge of the cooktop and remove, taking care not to scratch the cooktop surface. Alternatively wait until the lid has cooled to room temperature, the vacuum has been released, then remove the lid by lifting it from the cooktop.

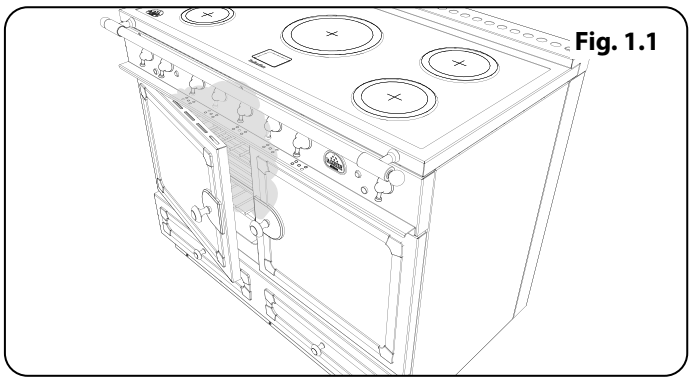
Fig. 1.1

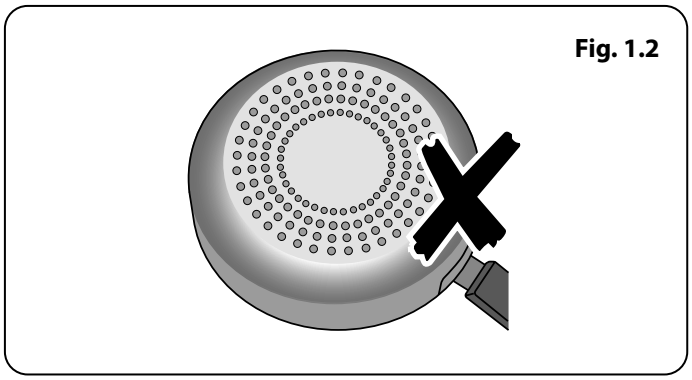
Fig. 1.2

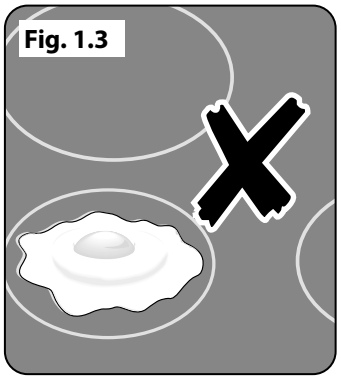
Fig. 1.3

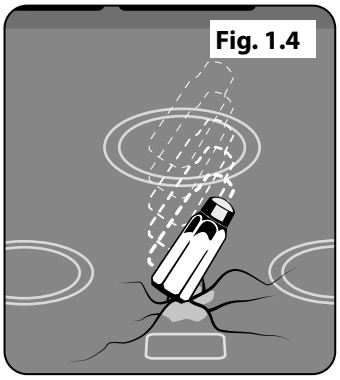
Fig. 1.4

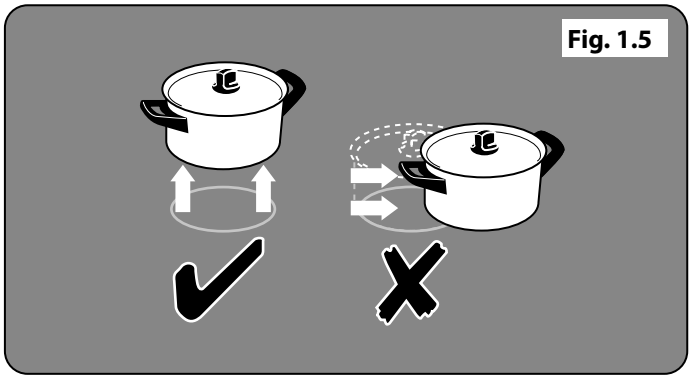
Fig. 1.5

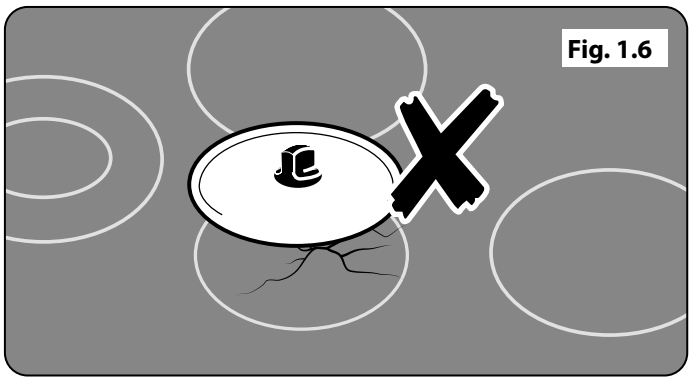
Fig. 1.6

Use the right size pan

This appliance is equipped with cooktop zones of different sizes. Use utensils with flat bottoms. **DO NOT** use unstable pans and position the handles away from the edge of the cooktop.

Proper relationship of utensil to burner will improve efficiency.

⚠ **NEVER leave cooktop zones unattended at high settings. Pans boiling over can cause smoking and greasy spills may catch on fire.**

⚠ **Protective Liners – DO NOT use aluminium foil to line cooktop bowls or oven bottoms. Foil liners may result in a risk of electric shock, or fire and will damage the enamel finish. NEVER allow aluminium foil to contact the heating elements.**

⚠ **DO NOT use hotplate protectors, foil or hotplate covers of any description. These may affect the safe use of your hotplate burners and are potentially hazardous to health.**

⚠ **Only certain types stainless steel, enamelled steel pans or cast iron pans with enamelled bases are suitable for induction cooktop cooking.**

⚠ **Utensil handles should be turned inward and not over adjacent cooktop zones. If handles are left over adjacent zones they will get hot and may burn.**

General safety instructions

⚠ **This appliance is provided with rollers to facilitate movement during installation. The range should not be moved after installation.**

This appliance must be installed by a competent person in accordance with the installation instructions. The installation must comply with the relevant regulations and also the local electricity supply company requirements.

This appliance is designed for domestic cooking only. Use for any other purpose could invalidate any warranty or liability claim.

The range should be serviced by a qualified service engineer and only approved parts used. Have the installer show you the location of the range circuit breaker. Mark it for easy reference. Always allow the range to cool and then switch off at the circuit breaker before cleaning or carrying out any maintenance work, unless specified otherwise in this guide.

⚠ **All parts of the range become hot with use and will retain heat even after you have stopped cooking.**

⚠ **Take care when touching range, to minimize the possibility of burns, always be certain that the controls are in the OFF position and that it is cool before attempting to clean the range.**

⚠ **Clean with caution. If a wet sponge or cloth is used to wipe spills on a hot surface, be careful to avoid steam burns. Some cleaners can produce noxious fumes if applied to a hot surface.**

Clean only parts listed in this guide.

In the interests of hygiene and safety the range should be kept clean at all times as a build up in fats and other food stuff could result in a fire.

Always keep combustible wall coverings or curtains etc. a safe distance away from your range.

⚠ **DO NOT spray aerosols in the vicinity of the range while it is in use.**

DO NOT store or use combustible materials, or flammable liquids in the vicinity of this appliance.

Take great care when heating fats and oils, as they will ignite if they get too hot.

Use a deep fat thermometer whenever possible to prevent overheating fat beyond the smoking point.

NEVER leave a deep fry pan unattended. Always heat fat slowly, and watch as it heats. Deep fry pans should be only a maximum of one third full of fat. Filling the pan too full of fat can cause spill over when food is added. If you use a combination of oils or fats in frying, stir them together before heating, or as the fats melt.

Foods for frying should be as dry as possible. Frost on frozen foods or moisture on fresh foods can cause hot fat to bubble up and over the sides of the pan. Carefully watch for spills or overheating of foods when frying at high or medium high temperatures. **NEVER** try to move a pan of hot fat, especially a deep fry pan. Wait until the fat is cool.

When an oven is on, **DO NOT** use the top of the flue (the round holes along the back of the range) for warming plates, dishes, drying dish towels or softening butter.

When using an electrical appliance near the cooktop, be sure that the cord of the appliance does not come into contact with the cooktop.

Take care that no water seeps into the appliance.

Make sure that your kitchen is well ventilated at all times. Use extractor fans or hoods when installed.

The range is designed for cooking foods only and must not be used for any other purpose.

The oven should **NOT** be used for heating the kitchen, not only does this waste fuel but the control knobs may become overheated.

When the oven is on **DO NOT** leave the oven door open for longer than necessary.

The specification of this range should not be altered.

This appliance is heavy, take care when moving it.

When the range is not in use ensure that the control knobs are in the off position.

2. Range Overview

Fig. 2.1

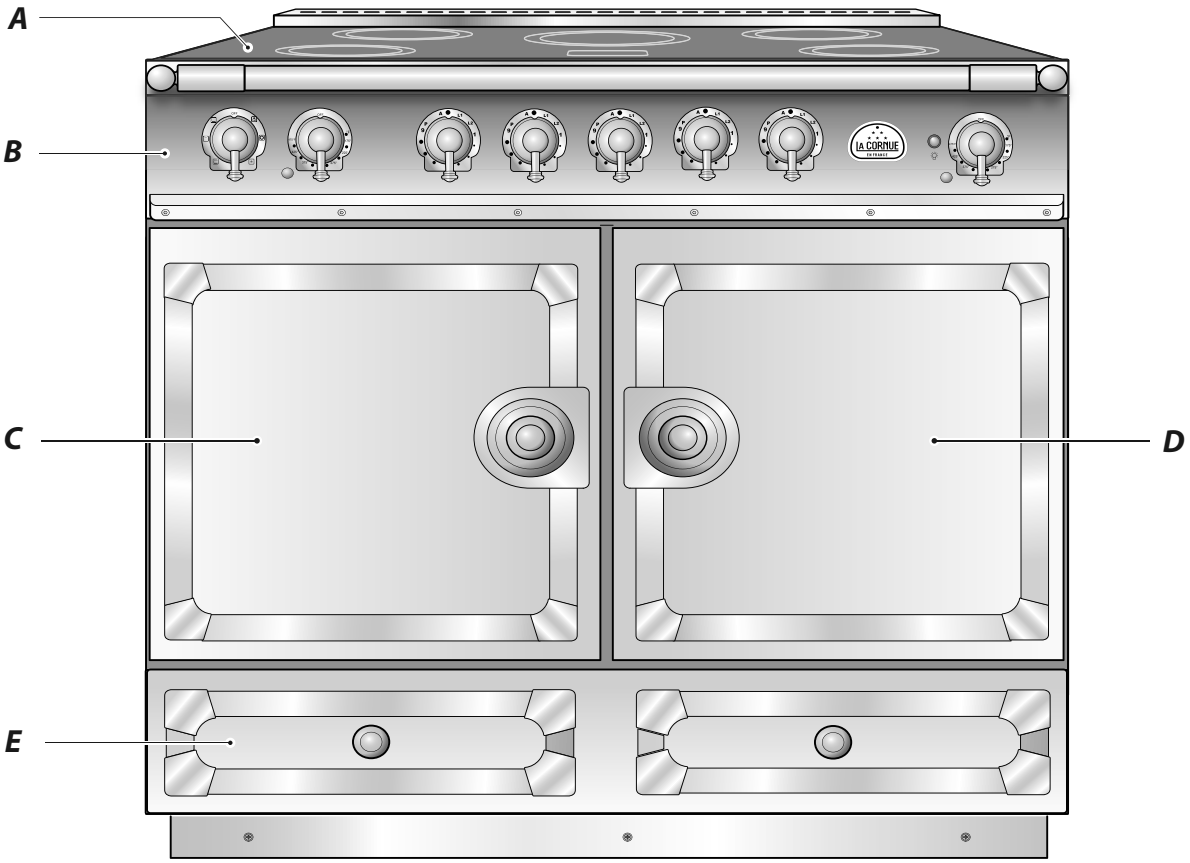

Fig. 2.2

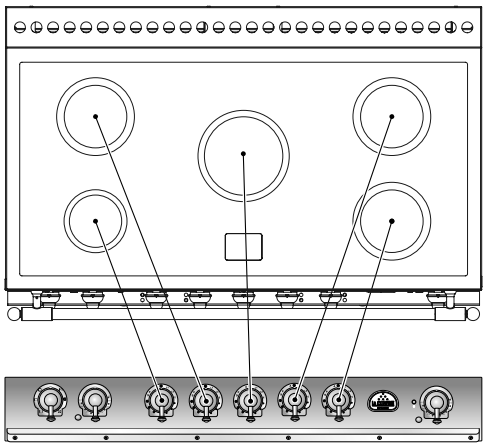

Fig. 2.3

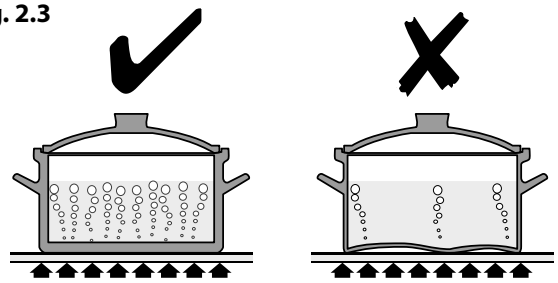

The 44" induction range (**Fig. 2.1**) has the following features:

A. 5 induction cooking zones

B. Control panel

C. Main multi-function oven

D. Main fan oven

E. Storage drawer

Cooktop

Use only pans that are suitable for induction cooktops. We recommend stainless steel, enamelled steel pans or cast iron pans with enamelled bases. Note that some stainless steel pans are not suitable for use with an induction cooktop so please check carefully before purchasing any cookware.

The controls for the induction cooktop are shown in (**Fig. 2.2**).

Pans made of copper, aluminium or ceramic are not suitable for use on an induction cooktop. The kind of pan you use and the quantity of food affects the setting required. Higher settings are required for larger quantities of food.

Pots and pans should have thick, smooth, flat bottoms (**Fig. 2.3**). This allows the maximum heat transfer from the cooktop to the pan, making cooking quick and energy efficient. Never use a round-bottomed wok, even with a stand.

The very best pans have bases that are very slightly curved up when cold (**Fig. 2.4**). If you hold a ruler across the bottom you will see a small gap in the middle. When they heat up the metal expands and lies flat on the cooking surface.

Make sure that the base of the pan is clean and dry to prevent any residue burning onto the cooktop panel. This also helps prevent scratches and deposits.

Always use pans that are the same size as the areas marked on the cooktop. Using a lid will help the contents boil more quickly.

Take care when placing hot lids onto the cooktop surface. Lids that have been covering boiling or steaming foods can 'stick' to the ceramic glass. Should this occur, DO NOT attempt to lift the lid off the hotplate: this may damage the cooktop surface. Instead, slide the lid to the edge of the cooktop surface and remove.

Always take care before touching the surface, even when the cooktop is turned off. It may be hotter than you think!

Cooktop control indications & warnings

The induction cooktop comprises of five cooking zones containing induction elements with different ratings and diameters (**Fig. 2.5**) each with a pan detector and residual heat indicator, and a cooktop control display.

The cooktop control display (**Fig. 2.6**) informs you of the following induction cooktop functions:

- Pan Detector
- *H* Residual Heat Indicator
- *A* Automatic Heat-up
- *L* Child Lock
- *L1/L2* Low Temperature/Simmer Setting
- *P* Power Boost Setting

Pan Detector,

IMPORTANT: After use, switch off the cooktop element by its control and DO NOT RELY on the pan detector.

If a cooking area is switched on and there is no pan in place or if the pan is too small for the cooking area, then no heat will be generated. The symbol [] will appear on the cooktop control display; this is the "pan-missing symbol". Place a pan of the correct size on the cooking area and the [] symbol will disappear and cooking can begin. After 10 minutes without detecting a pan the cooking zone will switch off automatically.

Table 2.1 shows the minimum pan sizes recommended for each cooking zone.

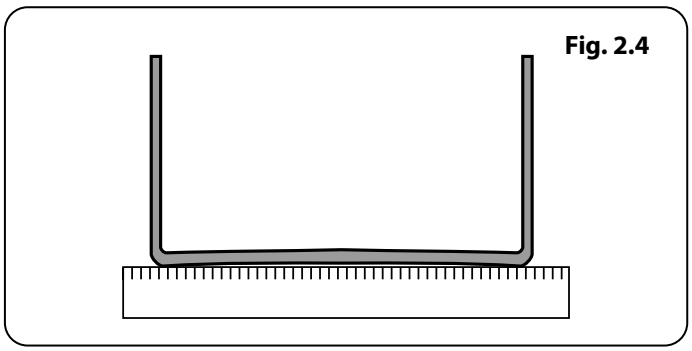

Fig. 2.4

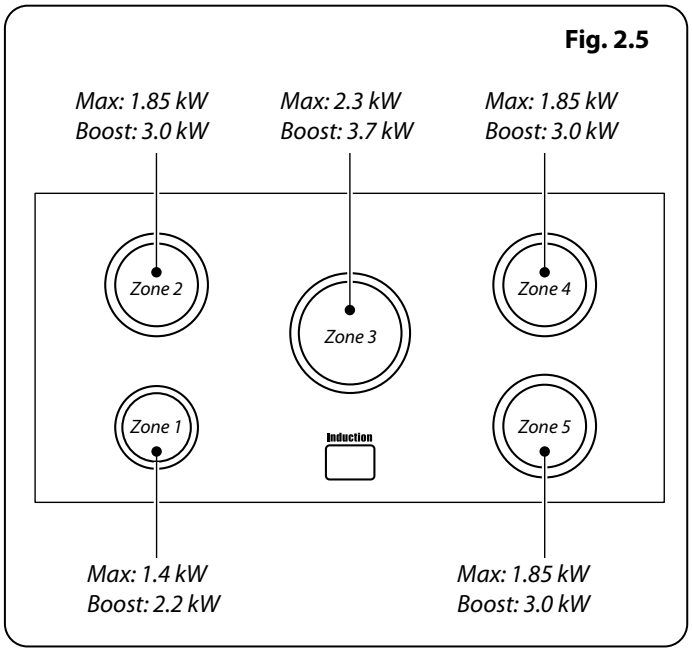

Fig. 2.5

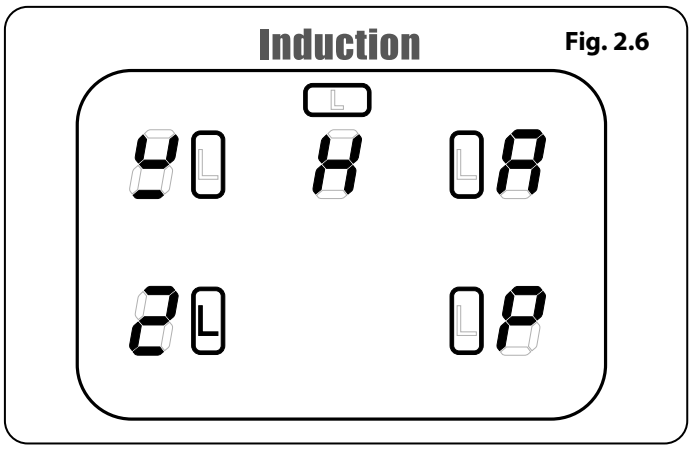

Fig. 2.6

Cooking zone	Minimum Pan Diameter (Pan base) inches (mm)
Front left	4 3/4" (120)
Rear left	5 1/2" (140)
Centre	8 1/4" (160)
Rear right	5 1/2" (140)
Front right	5 1/2" (140)

Table 2.1

Power level	Automatic heat-up time at 100% (min:sec)
1	0:48
2	2:24
3	3:50
4	5:12
5	6:48
6	2:00
7	2:48
8	3:36
9	

Table 2.2

Fig. 2.7

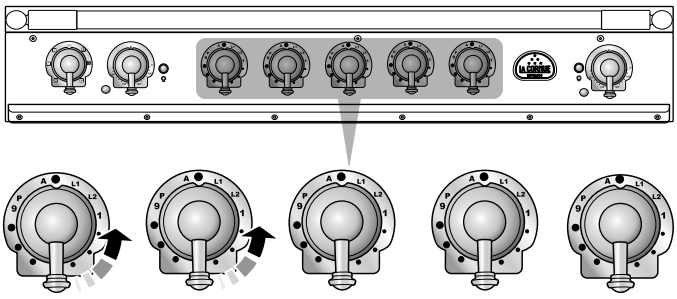

Fig. 2.8

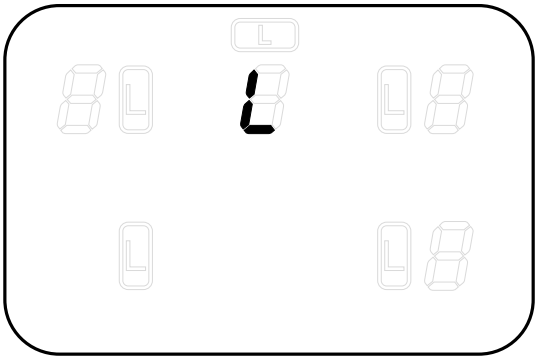

Note: Using pans with a base diameter smaller than those recommended will result in a power reduction.

Residual Heat Indicator, H

After use, a cooking zone will remain hot for awhile as heat dissipates. When a cooking zone is switched off, the residual heat indicator symbol [H] will appear in the display. This shows that the cooking zone temperature is above 140 °F (60 °C) and may still cause burns. Once the temperature has dropped to below 140 °F (60 °C) the [H] will go out.

Automatic Heat-up, A

This function is available on all of the cooking zones. It allows rapid heating up of the element to bring the selected cooking zone up to temperature. Once the zone is at the required cooking temperature the power level will reduce automatically to the preset level.

The function is selected by turning the control knob to the 'A' position. This can be selected by turning the control knob momentarily counter-clockwise from the zero position until the symbol [A] is shown on the cooktop control display.

Once the [A] is displayed, turn the control knob to the level of your choice (1 to 9). The pan will heat up at 100% power for a specified time before the power is reduced to the level selected.

When the Automatic Heat-up function is activated, the cooktop control display will flash alternately between the [A] setting and the chosen power level.

Once the Automatic Heat-up time has ended, the cooktop display will stop flashing and will show the chosen power level.

The Automatic Heat-up function can be stopped by either turning the control knob back to the "0" power setting or turning the control knob to the "9" power setting.

For your guidance **Table 2.2** shows the time available at 100% power depending on the power level selected in the Automatic Heat-up mode.

Child Lock, L

To prevent the unwanted use by children, the cooktop can be locked.

IMPORTANT: This can only be activated when all the cooking zones are switched off.

To lock the cooktop, simultaneously turn the two left-hand cooktop controls counter-clockwise (**Fig. 2.7**) and hold until the *L* symbol appears in the centre of the cooktop control display (**Fig. 2.8**).

Note: [A] will flash when locking the cooktop – this is normal.

Locking the cooktop will NOT affect the oven; it can still be used.

To unlock the cooktop, simultaneously turn the two left-hand controls counter-clockwise and hold until the *L* symbol disappears from the centre of the cooktop control display.

Low Temperature Setting, L1/L2

This function should only be used when heating from cold.

Each cooking area is equipped with 2 low temperature settings:

- *L1* will maintain a temperature of about 108 °F (42 °C) – ideal for gently melting butter or chocolate.
- *L2* will maintain a temperature of about 201 °F (94 °C) – ideal for simmering (bring the pan to the boil and then select *L2* to keep soups, sauces, stews, etc at an optimal simmer).

The maximum time this setting can be used is 2 hours, after which the cooktop will switch off automatically. If required, you can immediately restart the Low Temperature function by reactivating *L2* or *L2*.

The maximum times for all other power levels are shown in **Table 2-3**.

Power Boost Setting, P

All of the induction cooking zones have Power Boost available, activated by turning the control knob clockwise until [*P*] is shown on the cooktop control display.

Power Boost allows additional power to be made available for each of the cooking zones. This is useful to bring a large pan of water to the boil quickly.

The Power Boost function operates for a maximum of 10 minutes on each zone, after which the power is automatically reduced to setting 9.

When using the Power Boost function, the cooking zones are linked.

Fig. 2.9 shows the cooktop layout. Zones A and B are linked together as are zones D and E. The centre area C runs independently, regardless of the use of other cooking areas.

This means that when using zone A on Power Boost and then switching zone B to power boost, the power to zone A will reduce slightly. The last zone switched to Power Boost always takes priority. Zones D and E work in the same way.

This is a built in safety device.

Deactivate the Power Boost function by turning the control knob to a lower setting.

Power Level	Maximum Operating Time
L1 and L2	2 hours
1	6 hours
2	6 hours
3	5 hours
4	5 hours
5	4 hours
6	1.5 hours
7	1.5 hours
8	1.5 hours
9	1.5 hours
Power Boost	10 minutes

Table 2.3

Fig. 2.9

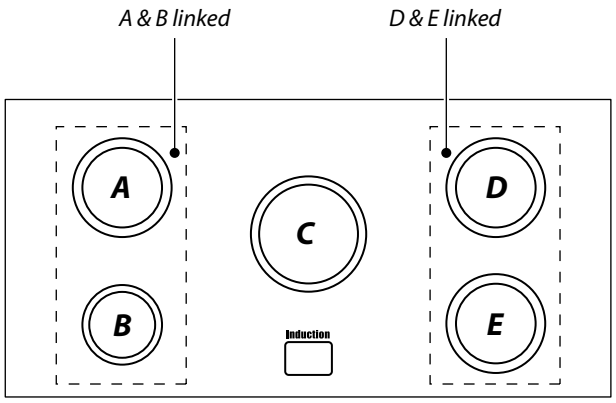

Fig. 2.10

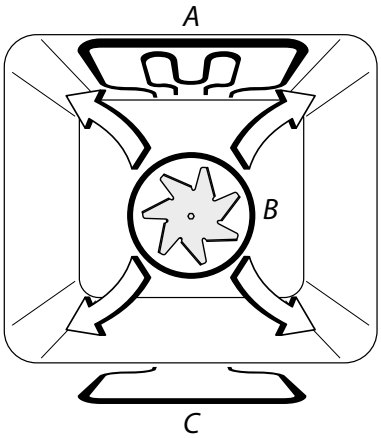

A – Grill elements, B – Convection elements, C – Base heat elements

Function	Use
Defrost	To thaw small items in the oven without heat
Fan oven	A full cooking function, even heat throughout, great for baking
Fanned broiling	Broiling meat and fish with the door closed
Fan assisted	A full cooking function good for roasting and baking
Conventional oven	A full cooking function for roasting and baking in the lower half of the oven
Browning element	To brown and crisp cheese topped dishes
Base heat	To crisp up the bases of quiche, pizza or pastry

Table 2.4

Fig. 2.11

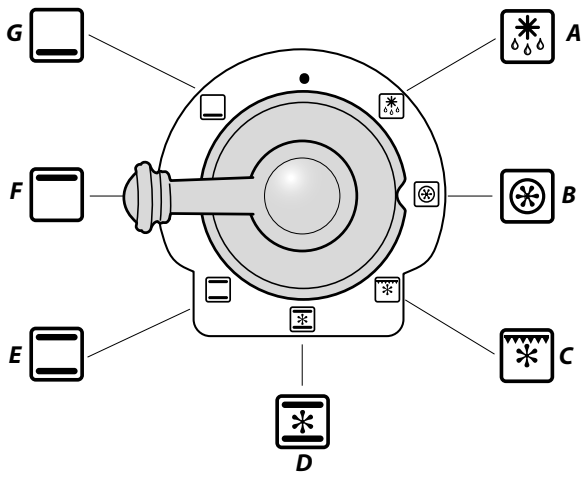

A – Defrost, B – Fan oven, C – Fanned broiling, D – Fan assisted oven, E – Conventional oven, F – Browning element, G – Base heat

Overheat Function

This function identifies when the temperature of the pan rises rapidly and works to maintain a safe level of pan temperature. It should not interfere with normal cooking.

Cookware with bases that become distorted **(Fig. 2.2)** when heated may interfere with the operation of the Overheat Function. This may result in damage to your cookware or Induction Glass Cooktop.

⚠ **Please remember not to leave the cooktop unattended. Care should be taken to not allow your cookware to boil dry. Damage to your cookware and Induction Glass Cooktop may result.**

Please read and follow the manufacturers' instructions carefully before using cookware on your induction cooktop.

The ovens

References to 'left-hand' and 'right-hand' ovens apply as viewed from the front of the appliance.

The left-hand oven is a multi-function oven, while the right-hand oven is a fan oven.

IMPORTANT: Before using the ovens for the first time, to dispel manufacturing odors, turn the oven to 200 °C (395 °F) in Convection Assisted mode and run for one hour. To clear the smell make sure the room is well ventilated to the outside air, by opening windows or turning on your ventilation hood.

During use the appliance becomes hot. Care should be taken to avoid touching the heating elements inside the oven.

Multi-function Ovens

Multi-function ovens have an oven fan and oven fan element, as well as two extra heating elements (**Fig. 2.10**). One element is in the top of the oven and the second is under the oven base. Take care to avoid touching the top element and element deflector when placing or removing items from the oven.

The multi-function oven has 3 main cooking functions: **fan**, **fan assisted** and **conventional** cooking. These functions should be used to complete most of your cooking needs.

The **browning element** and **base heat** can be used in the latter part of the cooking process to fine tune the results to your particular requirements.

Use **fanned broiling** for all your broiling needs and **defrost** to safely thaw small items of frozen food.

Table 2.4 gives a summary of the multi-function modes. The multi-function oven has many varied uses. We suggest you keep a careful eye on your cooking until you are familiar with each function. Remember, not all functions will be suitable for all food types.

Multi-function Oven Functions (Fig. 2.11)

Defrost

This function operates the fan to circulate cold air only. Make sure the temperature control is at 0°C and that no heat is applied. This enables small items such as desserts, cream cakes and pieces of meat, fish and poultry to be defrosted.

Defrosting in this way speeds up the process and protects the food from flies. Pieces of meat, fish and poultry should be placed on a shelf, over a tray to catch any drips. Be sure to wash the shelf and tray after defrosting.

Defrost with the oven door closed.

Large items, such as whole chickens and joints should not be defrosted in this way. We recommend this be carried out in a refrigerator.

Defrosting should not be carried out in a warm oven or when an adjoining oven is in use or still warm.

Make sure that dairy foods, meat and poultry are completely defrosted before cooking.

Fan Oven

This function operates the fan and the heating element around it. An even heat is produced throughout the oven, allowing you to cook large amounts quickly.

Fan oven cooking is particularly suitable for baking on several shelves at one time and is a good 'all-round' function. It may be necessary to reduce the temperature by approximately 10 °C for recipes previously cooked in a conventional oven.

If you wish to preheat the oven, wait until the indicator light has gone out before inserting the food.

Fanned Broiling

This function operates the fan whilst the top element is on. It produces a more even, less fierce heat than a conventional grill. For best results, place the food to be grilled, on a trivet over a roasting tin, which should be smaller than a conventional grill pan. This allows greater air circulation. Thick pieces of meat or fish are ideal for broiling in this way, as the circulated air reduces the fierceness of the heat from the grill.

The oven door should be kept closed while broiling is in progress, so saving energy.

You will also find that the food needs to be watched and turned less than for normal broiling. Preheat this function before cooking.

For best results we recommend that the grill pan is not located on the uppermost shelf.

Fan Assisted Oven

This function operates the fan, circulating air heated by the elements at the top and the base of the oven. The combination of fan and conventional cooking (top and base heat) makes this function ideal for cooking large items that need thorough cooking, such as a large meat roast.

It is also possible to bake on two shelves at one time, although they will need to be swapped over during the cooking time, as the heat at the top of the oven is greater than at the base, when using this function.

This is a fast intensive form of cooking; keep an eye on the food cooking until you have become accustomed to this function.

Conventional Oven (Top and Base Heat)

This function combines the heat from the top and base elements. It is particularly suitable for roasting and baking pastry, cakes and biscuits.

Food cooked on the top shelf will brown and crisp faster than on the lower shelf, because the heat is greater at the top of the oven than at the base, as in 'Fan Assisted Oven' function. Similar items being cooked will need to be swapped around for even cooking. This means that foods requiring different temperatures can be cooked together, using the cooler zone in the lower half of the oven and hotter area to the top.

The exposed top element may cook some foods too quickly, so we recommend that the food be positioned in the lower half of the oven to cook. The oven temperature may also need to be lowered.

Browning Element

This function uses the element in the top of the oven only. It is a useful function for the browning or finishing of pasta dishes, vegetables in sauce, shepherds pie and lasagne, the item to be browned being already hot before switching to the top element.

Base Heat

This function uses the base element only. It will crisp up your pizza or quiche base or finish off cooking the base of a pastry case on a lower shelf. It is also a gentle heat, good for slow cooking of casseroles in the middle of the oven or for plate warming.

The Browning and Base Heat functions are useful additions to your oven, giving you flexibility to finish off items to perfection.

Fig. 2.12

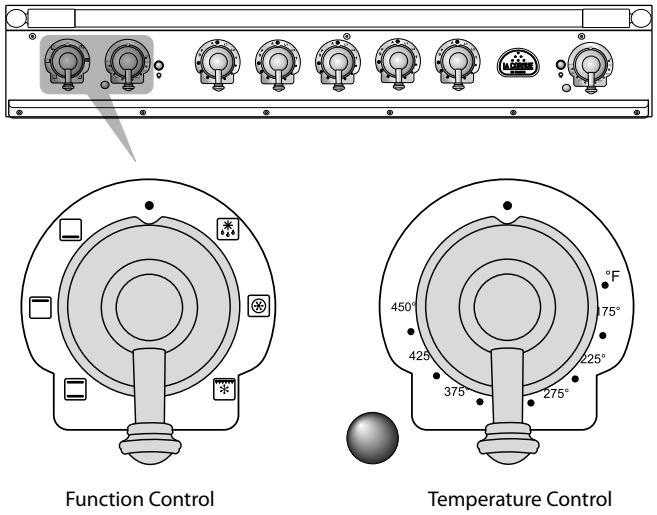

Fig. 2.13

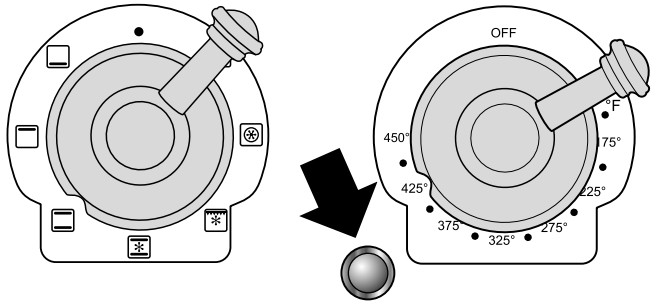

Fig. 2.14

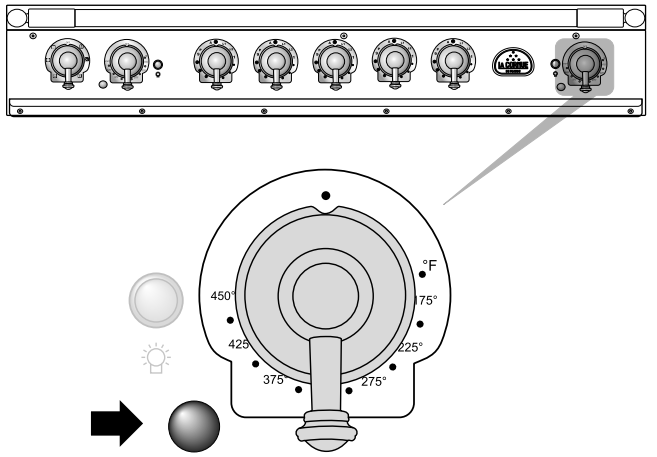

Fig. 2.15

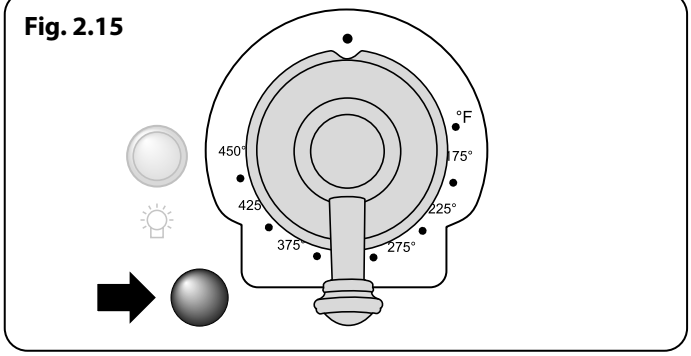

Fan Ovens

Fan ovens circulate hot air continuously, which means faster, more even cooking. The recommended cooking temperatures for a fan oven are generally lower than those for a non-fan oven.

Operating the Ovens

Multi-function Oven

The multi-function oven has two controls: a function control and a temperature control (**Fig. 2.12**).

Turn the function control to a cooking function. Turn the oven temperature knob to the temperature required (**Fig. 2.13**).

The oven indicator light will glow until the oven has reached the temperature you selected (**Fig. 2.13**). It will then cycle on and off during cooking as the oven maintains the selected temperature.

Fan Oven

Turn the oven knob to the desired temperature (**Fig. 2.14**).

The oven indicator light will glow until the oven has reached the temperature you selected (**Fig. 2.15**). It will then cycle on and off during cooking as the oven maintains the selected temperature.

Accessories

Oven Shelves

Each cooker is supplied with:

- 2 x Oven base tray (**Fig. 2.16**).
- 2 x Flat shelves (**Fig. 2.17**).
- 2 x Drop shelves (**Fig. 2.18**).
- 2 x Deluxe oven tray (**Fig. 2.19**).
- 1 x Deluxe oven tray trivet (**Fig. 2.20**).
- 1x set of Telescopic runners *(Optional extra)* (**Fig. 2.22**)
- 1x Deluxe shelf *(Optional extra)* (**Fig. 2.23**)

In addition to the flat shelves your cooker is supplied with drop shelves. The drop shelves increase the possibilities for oven shelf spacing.

Oven Lights

Press the button to turn on the oven lights (**Fig. 2.24**).

If the oven light fails, turn off the power supply before changing the bulb. See the '*Troubleshooting*' section for details on how to change the bulb.

Storage

The bottom drawer is for storing oven trays and other cooking utensils.

It can get very warm, so do not store anything in it, which may melt or catch fire.

⚠ **Never store flammable materials in the drawer. This includes paper, plastic and cloth items, such as cookbooks, plastic ware and towels, as well as flammable liquids.**

⚠ **Do not store explosives, such as aerosol cans, on or near the appliance.**

Fig. 2.16

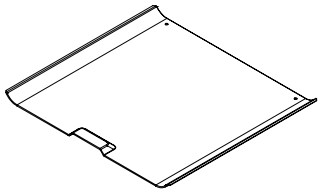

Fig. 2.17

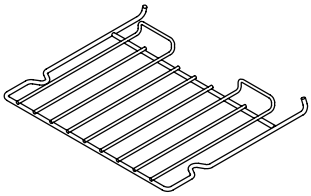

Fig. 2.18

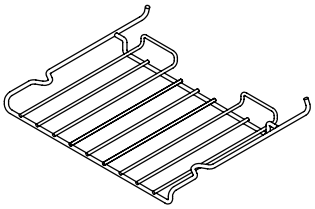

Fig. 2.19

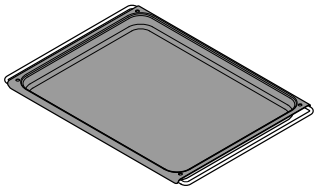

Fig. 2.20

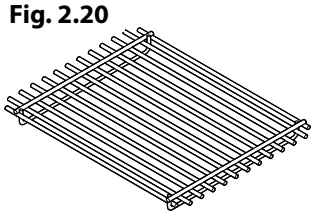

Fig. 2.22

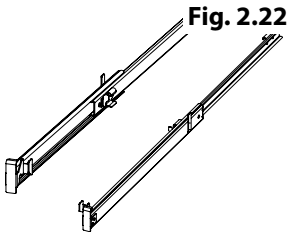

Fig. 2.23

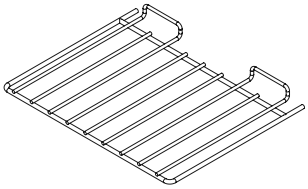

Fig. 2.24

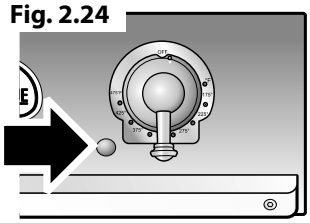

Fig. 2.25

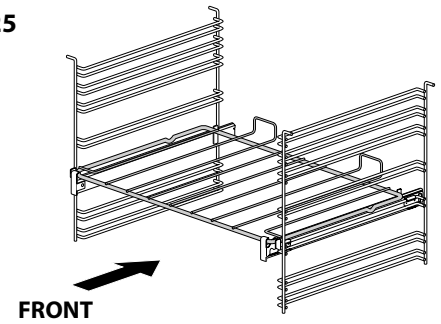

Fig. 2.26

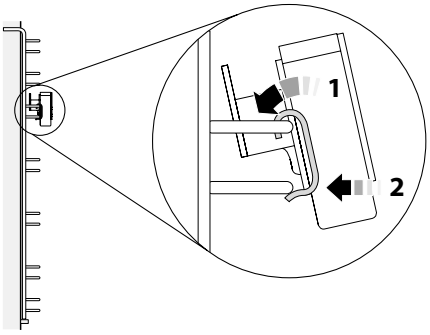

Fig. 2.27

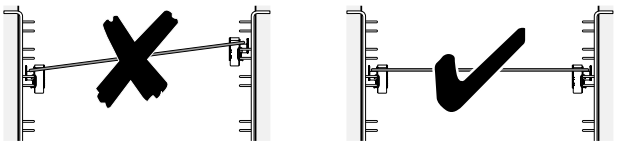

Fig. 2.28

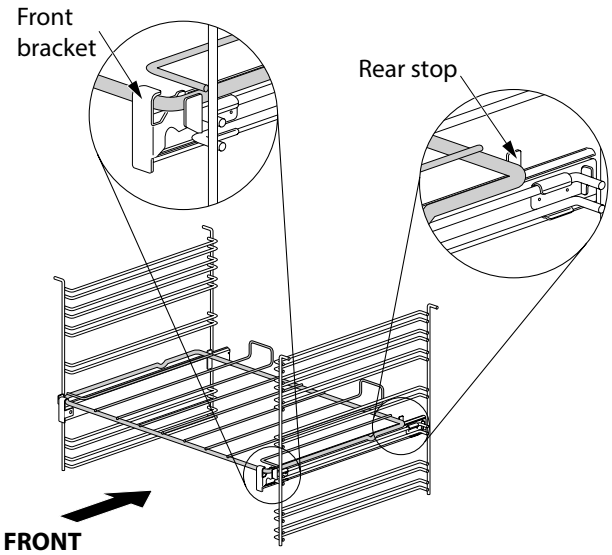

Telescopic runners *(Optional extra)*

A glide-out oven shelf is available for the left-hand oven (**Fig. 2.25**).

Note: The Handyrack must be removed before fitting the glide-out shelf.

The rungs on the shelf supports are in pairs. The glide-out shelf runners can be fitted to any pair except the top.

To fit the glide-out shelf runners

Hook the rear of the runner over the top rung of a pair of shelf supports. Then hook the front of the runner onto the same rung. Push to clip under the bottom rung (**Fig. 2.26**).

The front of the shelf runners can be identified by the bracket (**Fig. 2.28**).

Ensure that the shelf runners are fitted in the same position on each side (**Fig. 2.27**).

To fit the glide-out shelf

Check the shelf runners are secure before fitting the glide-out shelf.

Hook the front of the glide-out oven shelf onto the runners as shown (**Fig. 2.28**). The rear of the shelf should rest on the runners, in front of the rear stop (**Fig. 2.28**).

Ensure that the shelf sits flat once in position.

DO NOT put the glide-out shelf runners in a dishwasher

3. Cooking Tips

Hints on Using Your Induction Cooker

If you have not used an induction cooker before please be aware of the following:

- Make sure that the pans you have or buy are suitable for use on the induction hob. Stainless steel, enamelled steel or cast iron is ideal. Double check before you buy pans – they must have bases that would attract a magnet.
- Allow time to get used to induction cooking; it is fast and powerful as well as being gentle. When simmering, you may notice that liquids appear to stop bubbling and then start again almost immediately. This is perfectly normal.
- You may notice a faint vibrating sound coming from the pans when using the induction hob. Again, this is perfectly normal and will depend upon the type and style of pans you are using.
- The induction heating elements will phase on and off when cooking. Although an active cooking zone may appear to switch on and off, a constant heat is still being supplied to the base of the pan – this is completely normal.

General Oven Tips

The wire shelves should always be pushed firmly to the back of the oven.

Baking trays with food cooking on them should be placed level with the front edge of the oven's wire shelves. Other containers should be placed centrally. Keep all trays and containers away from the back of the oven, as overbrowning of the food may occur.

For even browning, the maximum recommended size of a baking tray are:

- depth: 13 ⅜" (340 mm) by width: 13 ⅜" (340 mm) in the main oven

When the oven is on, DO NOT leave the door open for longer than necessary, otherwise the knobs may get very hot.

- Always leave a finger's width between dishes on the same shelf. This allows the heat to circulate freely around them.
- To reduce fat splashing when you add vegetables to hot fat around a roast, dry them thoroughly or brush lightly with cooking oil.
- Where dishes may boil and spill over during cooking, place them on a baking tray.
- The 'Cook & Clean' oven liners (see 'Cleaning Your Cooker') work better when fat splashes are avoided. Cover meat when cooking.
- Sufficient heat rises out of the oven while cooking to warm plates in the grill compartment.
- If you want to brown the base of a pastry dish, preheat the baking tray for 15 minutes before placing the dish in the centre of the tray.

4. Cooking table

The oven control settings and cooking times given in the table below are intended to be used as a guide only. Individual tastes may require the temperature to be altered to provide a preferred result.

Food is cooked at lower temperature in a fan oven than in a conventional oven. When using recipes, reduce the fan oven temperature by 25 °F and the cooking time by 5-10 minutes. The temperature in the fanned oven does not vary with height in the oven so you can use any shelf.

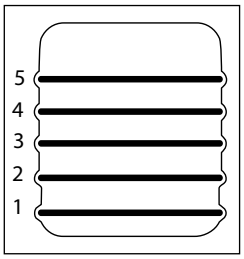

	Conventional oven	Rack position for conventional cooking	Convection oven	
	Temperature °F		Temperature °F	Approximate cooking time
Meat				
Beef (no bone)	300	2	300	30-35 minutes per 1 lb + 30-35 minutes
	375	2	375	20-25 minutes per 1 lb + 20-25 minutes
Lamb	300	2	300	30-35 minutes per 1 lb + 30-35 minutes
	375	2	375	20-25 minutes per 1 lb + 20-25 minutes
Pork & veal	300	2	300	35-40 minutes per 1 lb + 35-40 minutes
	375	2	375	25-30 minutes per 1 lb + 25-30 minutes
Poultry				
Chicken	300	2	300	20-25 minutes per 1 lb + 20-25 minutes
	375	2	375	15-20 minutes per 1 lb + 15-20 minutes
Turkey (slow cook)	300	2	300	25-30 minutes per 1 lb + 25-30 minutes
	375	2	375	20 minutes per 1 lb + 20 minutes
Turkey (fast cook)	300	2	300	20 minutes per 1 lb + 20 minutes
	375	2	375	15 minutes per 1 lb + 15 minutes
Duck/Duckling	300	2	300	20 minutes per 1 lb
Casserole	300	2	300	2-4 hours, according to recipe
Fish				
Fillet	350	2	350	15-20 minutes
Whole	350	2	350	Whole 10 minutes per 1 lb + 10 minutes
Steak out	350	2	350	Steaks according to thickness
Desserts				
Cup cake	325	2	325	20 minutes
Scone	375	2	375	15 minutes
Deep apple pie	350	2	350	45 minutes
Plate tart	350	2	350	45 minutes
Fruit cake 8" x 3. 5"	275	2	275	1¾-2 hours
Puff pastry	400	2	400	15-40 minutes according to size
Angel food cake	325	2	325	50-60 minutes
Brownies	350	2	350	25-30 minutes
Muffins	350	2	350	25-30 minutes
Cookies	350	2	350	15-20 minutes
Pound cakes	350	2	350	40-60 minutes
Bread	375	2	375	20-30 minutes

5. Cleaning your cooker

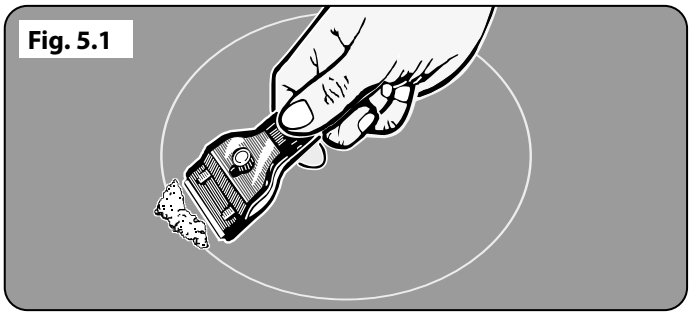

Isolate the electricity supply before carrying out any major cleaning. Then allow the cooker to cool.

NEVER use paint solvents, washing soda, caustic cleaners, biological powders, bleach, chlorine based bleach cleaners, coarse abrasives or salt.

DO NOT mix different cleaning products – they may react together with hazardous results.

All parts of the cooker can be cleaned with hot soapy water – **but take care that no surplus water seeps into the appliance**.

Remember to switch the electricity supply back on and reset the clock before re-using the cooker.

Cooktop

Daily care

First of all make sure that all heat indicator lights are off and that the cooking surface is cool. Apply a small dab of **Ceramic Hob Cleaner** ***(SAG-W2022)*** in the centre of each area to be cleaned. Dampen a clean paper towel and work the cream onto the cooking surface. As a final step, wipe the cooking surface with a clean, dry paper towel.

Enamel Rubber Eraser ***(SAG-W1843)*** removes scuff marks on ceramic, without scratching, providing easy cleaning for daily use.

Cleaning spills

For spills and boil-overs that occur while cooking, turn off the unit and wipe the area surrounding the hot zone with a clean paper towel. If a spill (other than a sugary substance) is on the hot zone, do not clean until the unit has completely cooled down, and then follow the instructions below, 'Cleaning Burned-on Spills'.

If you accidentally melt anything on the surface, or if you spill foods with a high sugar content (preserves, tomato sauce, fruit juice, etc.), remove the spill **IMMEDIATELY** with a single-edged razor scraper (not included), while the unit is still hot.

IMPORTANT: Use an oven glove to protect your hand from potential burns.

Scrape the major spill or melted material from the cooking zone and push into a cold area. Then, turn the unit 'OFF' and allow to cool before cleaning further. After the cooking surface cools down and the heat indicator lights go off, follow the 'Daily Care' procedure outlined above.

Cleaning burned-on spills

Make sure that the heat indicator lights are off and that the cooktop is cool. Remove the excess burned-on substance with a single-edged razor scraper (not included). Hold the scraper at an angle of about 30° to the surface and then scrape off the burned-on matter (**Fig. 5.1**).

Top Plate Scraper Tool: (*SAG-W2084)* Its stainless steel body is easy to clean and the built in blade protector ensures the blade can be safely withdrawn when the scraper is not in use.

To Remove Metal Rub-off

Sliding pans on the cooktop - especially aluminium or copper pans - can leave marks on the surface.

These marks often appear like scratches, but can easily be removed using the procedure described previously for 'Cleaning spills'.

If the rub-off marks are especially stubborn, use a cleaning cream together with the razor scraper, as described in 'Cleaning burned-on spills'.

Control panel and oven doors

The control panel and control knobs should only be cleaned with a soft cloth wrung out in clean hot soapy water but take care that no surplus water seeps into the appliance. Wipe with a clean dampened cloth then polish with a dry cloth.

The oven doors should only be cleaned with a soft cloth wrung out in clean hot soapy water.

Ovens

'Cook & Clean' Panels

The ovens have side 'Cook & Clean' panels which have been coated with a special enamel that partly cleans itself. This does not stop all marks on the lining, but helps to reduce the amount of manual cleaning needed.

These panels work better above 400 °F. If you do most of your cooking below this temperature, occasionally remove the panels and wipe with a lint free cloth and hot soapy water. The panels should then be dried and replaced and the oven heated at 400 °F for about one hour. This will ensure that the panels are working effectively.

Removing the oven linings

If you wish to clean the enamel interior of the oven, you will need to remove the shelves before removing the 'Cook & Clean' panels. You do not have to remove the support brackets to remove the panels. Lift each panel upward and slide forward off the support brackets (**Fig. 5.2**).

Once the panels have been removed, the oven enamel interior can be cleaned.

⚠ **DO NOT use steel wool (or any other materials that will scratch the surface).**

Refit in the reverse order.

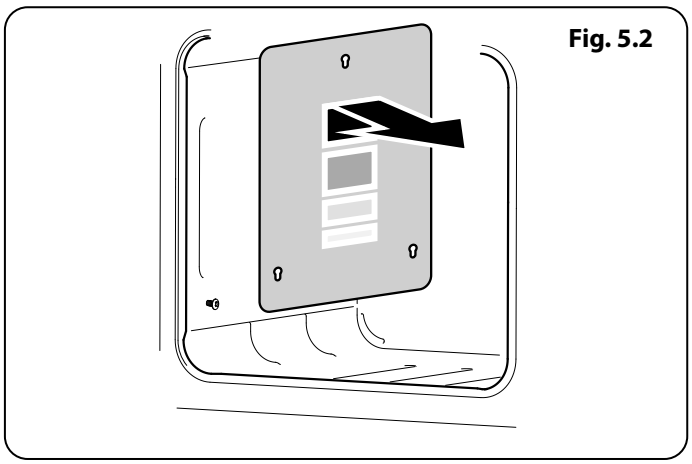

Fig. 5.2

Cleaning table

Cleaners listed (**Table 5.1**) are available from supermarkets or electrical retailers as stated.

For enamelled surfaces use a cleaner that is approved for use on vitreous enamel.

Regular cleaning is recommended. For easier cleaning, wipe up any spillages immediately.

Cooktop		
Part	**Finish**	**Recommended Cleaning Method**
Cooktop surface	Toughened glass	Hot soapy water, non-abrasive cleaner if necessary.
Outside of range		
Part	**Finish**	**Recommended Cleaning Method**
Door, door surround and storage drawer exterior	Enamel or paint	Hot soapy water, soft cloth. Any stubborn stains, remove with gentle detergent.
	Stainless steel	Chrome & steel cleaner and buff with a microfiber cloth.
Sides and plinth	Painted surface	Hot soapy water, soft cloth. Enamel cleaner or chrome & steel cleaner respectively, if necessary.
Back Splash/rear grille	Enamel or stainless steel	Hot soapy water, soft cloth. Cream cleaner, with care, if necessary.
Control panel	Paint, enamel or stainless steel	Warm soapy water. Do not use abrasive cleaners on lettering.
Control knobs/handles & trims	Plastic/chrome, aluminium, copper or lacquered brass	Warm soapy water, soft cloth.
	Brass	Brass polish.
Oven		
Part	**Finish**	**Recommended Cleaning Method**
Sides, floor and roof of oven (see below)	Enamel	Any proprietary oven cleaner that is suitable for enameled ovens. **CAUTION:** corrosive/caustic oven cleaners: follow manufacturer's instructions. **DO NOT** allow contact with the oven elements
Oven interior	Porcelain enamel	Branded oven cleaner suitable for enamel surfaces.
Oven shelves, Handyrack, broiler trivet, Handygrill rack	Chrome	An oven interior cleaner that is suitable for chrome. Soap filled pad. Dishwasher.
Broiler pan/meat tin (some models only)	Enamel	Hot soapy water. Soap filled pad. Dishwasher.

Table 5.1

6. Troubleshooting

Interference with and repairs to the hob MUST NOT be carried out by unqualified persons. Do not try to repair the hob as this may result in injury and damage to the hob. Please arrange for repair by a suitably competent person.

NOTE: The induction hob is able to self-diagnose a number of problems and can show this information to the user via the hob control display. Error codes may be displayed if your hob has developed a fault.

If your appliance reports an error or is not working, you may be able to correct the fault by consulting the following.

Error code E2 is displayed

The electronic unit is too hot. Please check the installation of the cooker, making sure that there is sufficient ventilation. In extreme cases, if a cooking utensil has been allowed to boil dry this error code may also be displayed. If in doubt please contact your installer or a qualified repair engineer.

No display operation

Over voltage or loss of supply voltage to the cooker. If in doubt please contact your installer or a qualified repair engineer.

Error code U400 is displayed

The cooker has been incorrectly connected. The control will switch off after approximately 1 second and the error code will be permanently displayed.

Consult your installer or a qualified repair engineer.

Error code Er followed by a number is displayed

The appliance has developed an internal technical fault that cannot be rectified by the user.

Consult your installer or a qualified repair engineer.

The fuse blows or the Residual-Current Device trips regularly

Please contact your installer or a qualified repair engineer.

The cooker will not switch on

Has the wiring system in the house blown a fuse or tripped an Residual-Current Device?

Has the cooker been correctly connected to the mains supply?

The induction hob is noisy

When using the induction hob there may be some 'noise' emitted from the pan. This is normal and may be most noticeable when cooking on high power settings or if 5 pans are used simultaneously. The type of pan may also contribute to induction 'noise'.

A crack has appeared in the hob surface

Disconnect the cooker immediately from the power supply and arrange for its repair. Do not use the cooker until after the repair.

My hob is scratched

Always use the cleaning methods recommended in this guide, and make sure that the pan bottoms are smooth and clean.

Marks from mineral deposits from water or food can be removed with a cleaning cream. However, tiny scratches are not removable but will become less visible in time as a result of cleaning.

The oven fan is noisy

The note of the oven fan may change as the oven heats up – this is perfectly normal.

The knobs get hot when I use the oven. Can I avoid this?

Yes, this is caused by heat rising from the oven, and heating them up.

DO NOT leave the oven door open.

If there is an installation problem and I don't get my original installer to come back to fix it, who pays?

You do. Service organisations will charge for their call-outs if they are correcting work carried out by your original installer. Therefore, it's in your own interest to keep track of this installer so that you can contact them as required.

Food is cooking too slowly, too quickly, or burning

Cooking times may differ from your previous oven. Check that you are using the recommended temperatures and shelf positions – see the oven cooking guide. Then adjust the settings according to your own individual tastes.

The oven is not cooking evenly

Do not use a baking tray with dimensions larger than those specified in the section on 'General Oven Tips'.

If you are cooking a large item, be prepared to turn it round during cooking.

If two shelves are used, check that space has been left for the heat to circulate. When a baking tray is put into the oven, make sure that it is placed centrally on the shelf.

Check that the door seal is not damaged and that the door catch is adjusted so that the door is held firmly against the seal.

A dish of water when placed on the shelf should be the same depth all over. (For example, if it is deeper at the back, then the back of the cooker should be raised up or the front lowered.) If the cooker is not level, arrange for your supplier to level it for you.

Oven temperature getting hotter as the cooker gets older

If turning the temperature down using the oven control knob has not worked, or has only worked for a short time, then you may need a new thermostat. This should be fitted by a service person.

Fig. 6.1

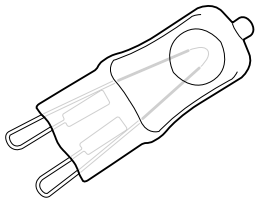

Fig. 6.2

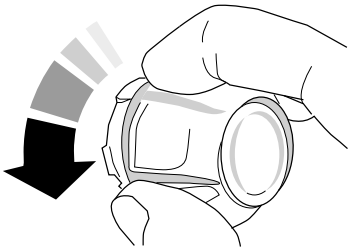

Fig. 6.3

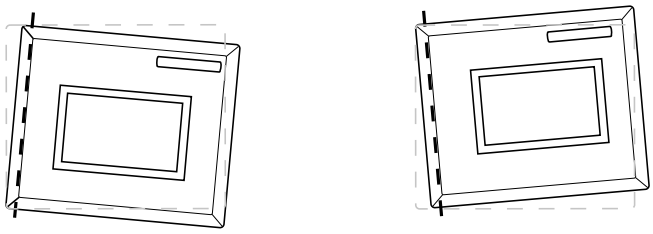

Effect of hinge adjustment – exagerrated for clarity

Fig. 6.4

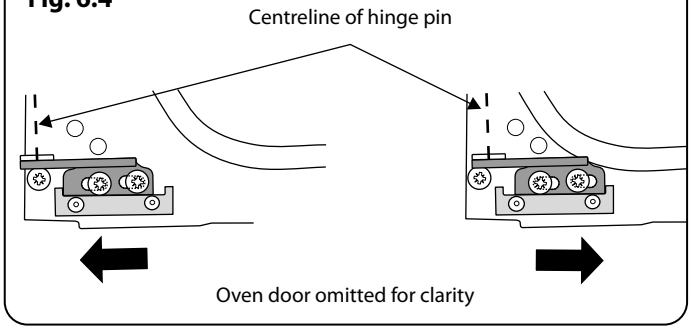

Oven door omitted for clarity

The oven light is not working

The bulb has probably blown. You can buy a replacement bulb (which is not covered under the guarantee) from most electrical stores. Ask for a 40W - 230V halogen lamp (G9) (**Fig. 6.1**).

Before removing the existing bulb, turn off the power supply and make sure that the oven is cool. Open the oven door and remove the oven shelves.

Locate the bulb cover and unscrew it by turning it counter-clockwise – it may be very stiff (**Fig. 6.2**).

Pull the existing bulb to remove it. When handling the replacement bulb, avoid touching the glass with your fingers, as oils from your hands can cause premature failure. Push, click in the replacement bulb.

Screw back the bulb cover. Turn on the circuit breaker and check that the bulb now lights.

The oven door is misaligned

The bottom hinge of either oven door can be adjusted to alter the angle of the door (**Fig. 6.3**). Loosen the bottom hinge fixing screws and use the notch and a flat bladed screwdriver to move the position of the hinge to set the hinge position (**Fig. 6.4**).

Retighten the hinge screws.

7. Installation Instructions

WARNING!

The anti-tip device supplied with this range must be installed when the appliance is installed. This will reduce risk of tipping of the appliance from abnormal usage or by excessive loading of the oven door.

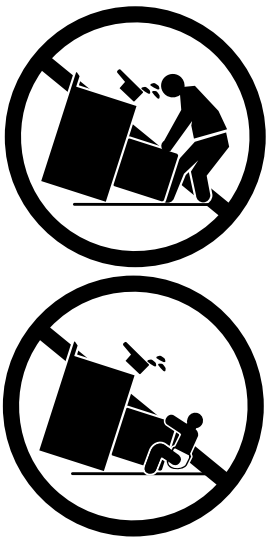

⚠WARNING!

- **ALL RANGES CAN TIP.**
- **INSTALL ANTI-TIP BRACKET PACKED WITH RANGE - SEE INSTALLATION INSTRUCTIONS.**
- **A CHILD OR ADULT CAN TIP THE RANGE AND BE KILLED.**
- **ENGAGE THE RANGE TO THE ANTI-TIP DEVICE - SEE INSTALLATION INSTRUCTIONS.**
- **RE-ENGAGE THE ANTI-TIP DEVICE IF THE RANGE IS MOVED.**
- **FAILURE TO DO SO CAN RESULT IN DEATH OR SERIOUS BURNS TO CHILDREN OR ADULTS.**

The following symbols are related to Safety and are used on the product and throughout this manual.

Meaning / Description	Symbol
WARNING / CAUTION An appropriate safety instruction should be followed or caution to a potential hazard exists.	
DANGEROUS VOLTAGE To indicate hazards arising from dangerous voltages.	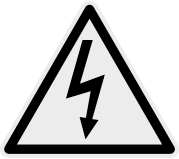
PROTECTIVE EARTH (GROUND) To identify any terminal which is intended for connection to an external conductor for protection against electric shock in case of a fault, or the terminal of a protective earth (ground) electrode.	

Meaning / Description	Symbol
HEAVY This product is heavy and reference should be made to the safety instructions for provisions of lifting and moving.	
DISCONNECT MAINS SUPPLY Disconnect incoming supply before inspection or maintenance.	

READ THESE INSTRUCTIONS FULLY BEFORE USE
SAVE THESE INSTRUCTIONS FOR FUTURE REFERENCE SAVE THE INSTALLATION INSTRUCTIONS FOR THE LOCAL ELECTRICAL INSPECTOR'S USE

INSTALLATION
Check the appliance is electrically safe when you have finished.

8. Service and parts

Firstly, please complete the appliance details below and keep them safe for future reference – this information will enable us to accurately identify the particular appliance and help us to help you. Filling this in now will save time and inconvenience if you later have a problem with the appliance. It may also be of benefit to keep your purchase receipt with this leaflet. You may be required to produce the receipt to validate a warranty field visit.

Dealer's Name and Address	
Name of Appliance	
Appliance Serial Number*	
Fuel Type	
Date of Purchase	
Installer's Name, Address and Telephone No.	
Date of Installation	

* This information is on the appliance data badge.

If you have a problem

In the unlikely event that you have a problem with your appliance, please refer to the rest of this booklet, especially the problem solving section, first to check that you are using the appliance correctly .

Please note

For warranty information or to register your CornuFe range, please contact the National Service Center at 877-522-6768.

Out of warranty

We recommend that our appliances are serviced regularly throughout their life to maintain the best performance and efficiency. The frequency of service will depend on usage – for normal usage once a year should suffice. Service work should only be carried out by a suitably Authorized Person .

Spare parts

To maintain optimum and safe performance, we recommend that only genuine spare parts are used. **DO NOT** use re-conditioned or unauthorized controls. Contact 800-821-0244 Option 1 .

9. Installation safety instructions

Regulations

Installation of this range must conform with local codes.

This range has been designed and certified to the requirements of UL 858 & CSA C22.2 E60335-2-6.

This appliance is to be installed in accordance with National, regional and electrical codes by a qualified person.

The range must be electrically grounded in accordance with local codes or, in the absence of local codes, in accordance with the National Electrical Code (NFPA 70, latest edition). In Canada, electrical grounding must be in accordance with the current CSA C22.1 Canadian Electrical Code Part 1 and/or local codes.

IMPORTANT!

Observe all governing codes and ordinances.

Save these instructions for the local electrical inspector's use.

For your safety

DO NOT store or use combustible materials, gasoline or other flammable vapors and liquids in the vicinity of this or any other appliance.

This appliance must be grounded.

Isolate electrical supply before installation.

This appliance is heavy. Ensure you have the correct facilities to complete the move. To find the weight of the appliance refer to the "Technical data".

Ensure all clearances are followed. Refer to "Positioning the range".

Improper installation, adjustment, alteration, service or maintenance can cause injury or property damage. Refer to this manual. For assistance or additional information, consult a qualified, appointed La Cornue Service Agent.

IMPORTANT!

Remove all packing material and literature from ovens before connecting the electrical supply to range.

Have your range installed by a qualified installer.

Your range must be electrically grounded in accordance with local codes or, in the absence of local codes, in accordance with the National Electrical Code (NFPA 70, latest edition).

DO NOT install your range on a substrate that cannot withstand 180 °F (82 °C).

DO NOT install your range directly onto carpeting. Ensure an appropriate, non-combustible, substrate is installed prior to installing the range.

Make sure the wall coverings around the range can withstand heat generated by the range up to 200 °F (93 °C).

Avoid placing cabinets above the range. There must be a gap of at least 30" (762 mm) between the top of the range and any combustible surface above it.

If a ventilating hood is installed above the range follow the installation instructions supplied with the hood.

Items of interest to children should not be stored above a range – children climbing on the range to reach items could be seriously injured.

To eliminate the risk of burns or fire by reaching over heated surface units, cabinet storage space located above the surface units should be avoided.

Location of the range

The range may be installed in a kitchen/kitchen dining area but **NOT** in a room containing a bath or shower.

The range is freestanding and should not be placed on a separate base.

The range should be positioned on a solid substrate.

Your range is heavy DO NOT place on soft floor coverings, such as cushioned vinyl or carpeting.

Use care when moving the range on cushioned vinyl or carpeted flooring.

When the floor covering ends at the front of the range, the area that the range will rest on should be built up to the same level or higher than the floor covering.

IMPORTANT - This will allow the range to be moved for cleaning or servicing. Also, make sure your floor covering will withstand 180°F. (See the Installation Safety Instructions section).

IMPORTANT - Make sure the wall coverings around your range can withstand the heat generated (up to 200°F) by the range. (See the Installation Safety Instructions section).

10. Installation

You will need the following equipment to complete the range installation satisfactorily:

- Multimeter (for electrical checks).

You will also need the following tools:

1. Steel tape measure
2. Cross-head screwdriver
3. Flat-bladed screwdriver
4. Spirit level
5. Pencil
6. Adjustable spanner
7. Allen keys (supplied)
8. 13 mm spanner or socket wrench

Checking the parts:

Allen keys	Rear Flue Grille	Hand rail and end pieces	1 deluxe oven trivet
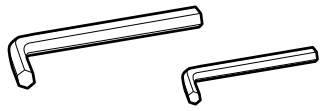	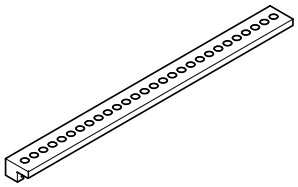	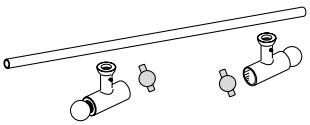	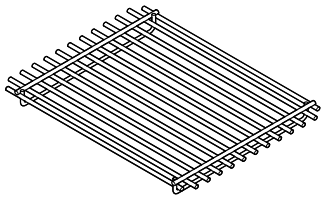
2 deluxe oven trays	2 drop racks	2 Oven Base Trays	2 flat oven racks
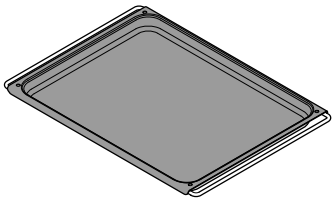	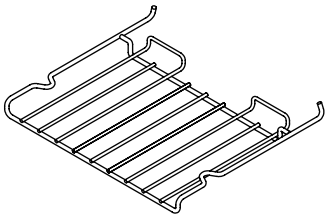	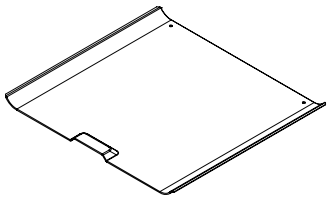	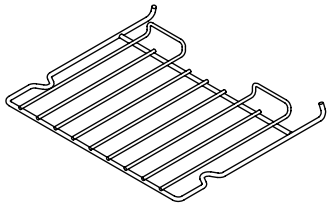
Anti-tip location bracket	Anti-tip device	Storage drawer mat (in base of storage drawer)	Side extension kit
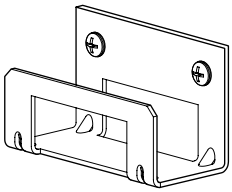	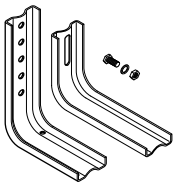	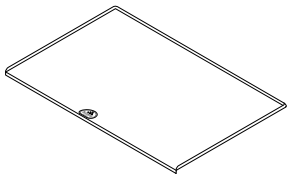	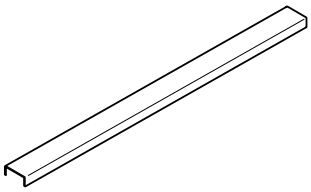
Toe kick	2 sets of oven door knob parts	5 burner control knobs **A** and 3 oven control knobs **B**	1x set of Telescopic runners (Optional extra)
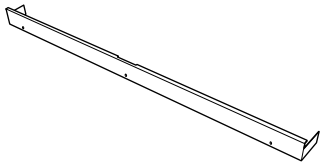	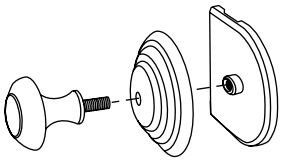	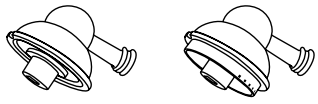 **A** **B**	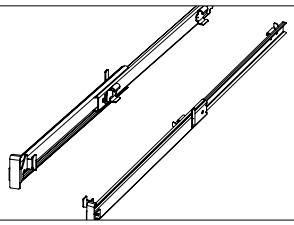
Deluxe shelf (Optional extra)			
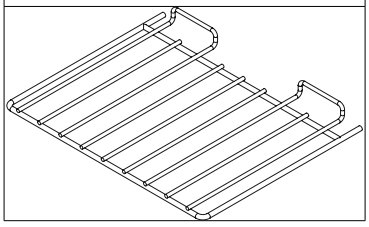			

Positioning the Range

Fig. 10.1, **Fig. 10.2** and **Fig. 10.3** show the minimum recommended distance from the range to nearby combustible surfaces (see **Table 10.1**).

We recommend a gap of no more than 3⁄16" (5 mm) (see **Fig. 10.1**) either side of the appliance for moving the range. It must be possible to move the range in and out for cleaning and servicing.

The range should not be placed on a base.

The hotplate surround should be level with, or above, any adjacent work surface (**Fig. 10.1**).

**Any rangehood should be installed in accordance with the hood manufacturer's instructions.*

***Any splashback must be fitted in accordance with the manufacturers instructions. Allowance should be made for the additional height of the flue trim, which is fitted to the range hob.*

Surfaces of furniture and walls at the sides and rear of the appliance should be heat, splash and steam resistant. Certain types of vinyl or laminate kitchen furniture are particularly prone to heat damage and discolouration.

We cannot accept responsibility for damage caused by normal use of the range to any material that de-laminates or discolours at temperatures less than 65 °C above room temperature.

If the range is near a corner of the kitchen, a clearance of 200 mm is required to allow the oven doors to open (**Fig. 10.4**). The actual opening of the doors is slightly less, but this allows for some protection of your hand as you open the door.

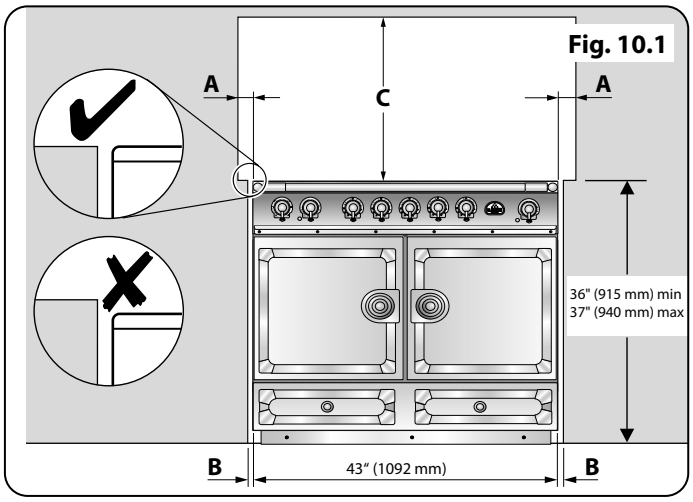

Fig. 10.1

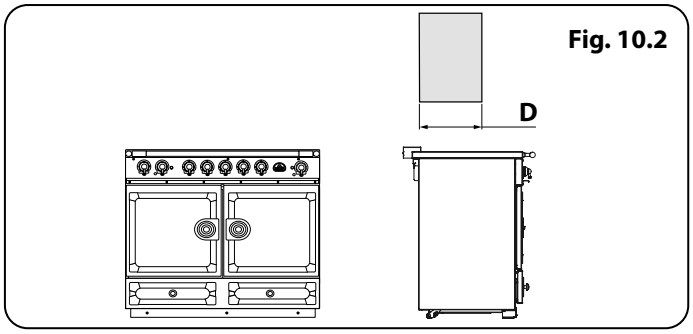

Fig. 10.2

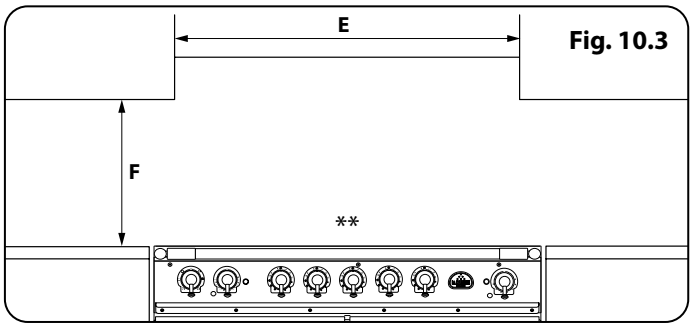

Fig. 10.3

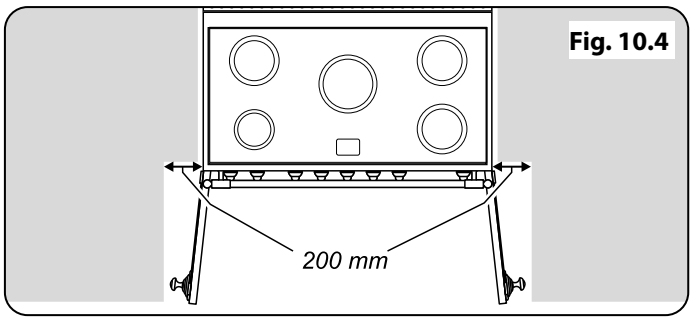

Fig. 10.4

Dimension	Description	USA	Canada
A	Gap between side of appliance and adjacent vertical surface ABOVE cooktop level	1 3⁄16" (30 mm) [1]	1 3⁄16" (30 mm) [1]
B	Gap between side of appliance and adjacent vertical surface BELOW cooktop level	3⁄16" (5 mm)	½" (12 mm)
C	Gap between cooktop level and any horizontal combustible surface	31 ½" (800 mm) [2]	31 ½" (800 mm) [2]
D	Maximum depth of cabinets installed above the top surface cooking sections	13" (330 mm)	13" (330 mm)
E	Minimum distance between horizontal surfaces less than dimension C	35 ½" (902 mm)	36 1⁄8" (918 mm)
F	Minmum distance between horizontal cabinets and worktop surfaces adjacent to range	16 5⁄32" (410 mm)	16 5⁄32" (410 mm)
1.	For non-combustible surfaces (such as unpainted metal or ceramic tiles) this gap is not required		
2.	This dimension can be reduced to 24" (610 mm) if the bottom of the wooden or painted metal cabinet is preserved with a non-combustible material		

Table 10.1

Fig. 10.5

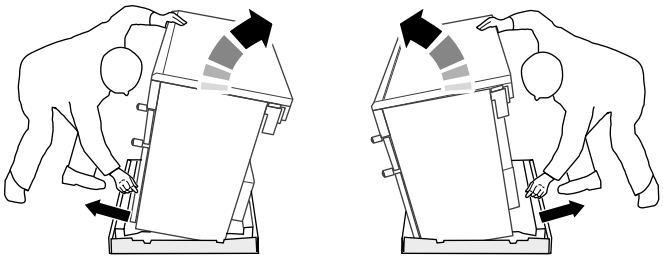

Fig. 10.6

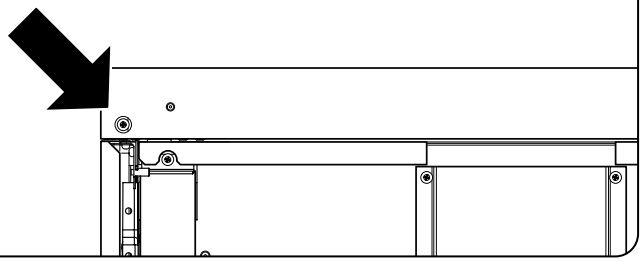

Fig. 10.7

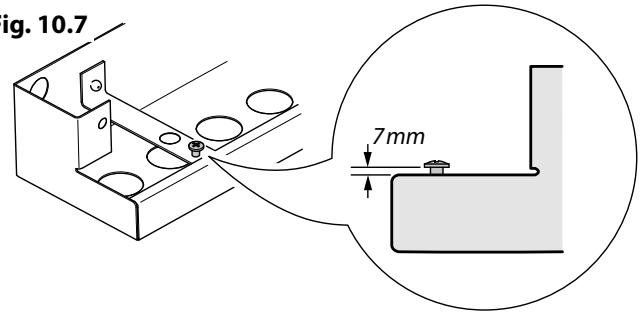

Fig. 10.8

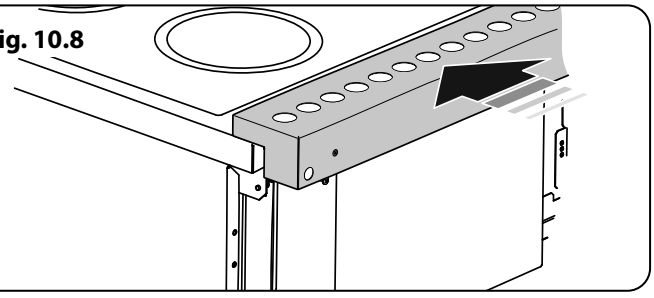

Fig. 10.9

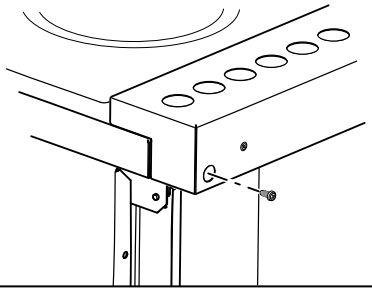

Fig. 10.10

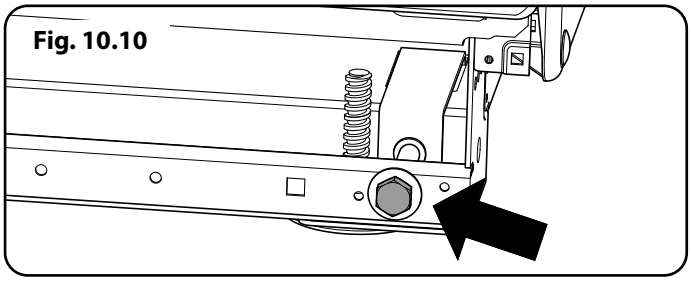

Moving the Range

⚠ **On no account try and move the range while it is plugged into the electricity supply.**

⚠ **The range is very heavy, so take great care.**

We recommend that two people manoeuvre the range. Make sure that the floor covering is firmly fixed, or removed, to prevent it being disturbed when moving the range around.

To help you, there are two levelling rollers at the back, and two screw-down levelling feet at the front.

Remove the polystyrene base pack. From the front, tilt the range backwards and remove the front half of the polystyrene base (**Fig. 10.5**). Repeat from the back and remove the rear half of the polystyrene base.

Fitting the Flue Grille

Unscrew and remove the two screws from the upper rear corners of the range **(Fig. 10.6)**. These will be used to secure the grille.

The flue grille is packed separately. There are four screws supplied fitted to the underside of the grille. These will need to be unscrewed until there is a space of 7 mm between the underside of the screw head and the grille **(Fig. 10.7)**.

Locate the grille with the screw heads inside the keyhole slots in the range. Gently push the grille towards the hob to lock it **(Fig. 10.8)**.

Fix the grille in place using the two screws removed previously **(Fig. 10.9)**. Tighten the four screws on the underside of the grille.

Lowering the Two Rear Rollers

To adjust the height of the rear of the range, first fit a 13 mm spanner or socket wrench onto the hexagonal adjusting nut (**Fig. 10.10**).

Rotate the nut – clockwise to raise – counter-clockwise to lower. Make 10 complete (360°) turns clockwise.

Make sure you lower BOTH REAR ROLLERS.

Completing the Move

Unfold the rear edge of the cardboard base tray. Open the oven doors so that you can get a good grip on the bottom of the fascia panel as you move the oven (**Fig. 10.11**).

Carefully push the range backwards off the base tray. Remove the base tray.

Position the range close to its final position, leaving just enough space to get behind it (**Fig. 10.12**).

Do not use the door handles or control knobs to manoeuvre the range.

Levelling the Range

It is recommended that you use a spirit level on a shelf in one of the ovens to check for level.

Place the range in its intended position. Take care not to twist it within the gap between the kitchen units as damage may occur to the range or units.

The front feet and rear rollers can be adjusted to level the range. To adjust the height of the rear of the range use a 13 mm spanner or socket wrench to turn the hexagonal adjusting nuts at the front bottom corners of the range.

To set the front turn the feet bases to raise or lower.

Fitting the stability bracket

We recommend using a stability bracket; first attach the bracket location device to the rear of the range (**Fig. 10.13**).

Then adjust the bracket to engage through the slot of the device (**Fig. 10.14** and **Fig. 10.15**).

Repositioning the Range Following Connection

If you need to move the range once it has been connected, make sure it is switched off at the supply switch before gripping under the fascia panel and lifting the front of the range slightly (**Fig. 10.11**). Check behind the range to make sure that the electricity cable is not caught.

As you progress, always make sure that the cable has sufficient slack to allow the range to move.

When you replace the range, check behind it again once more to make sure that the electricity cable is not caught or trapped.

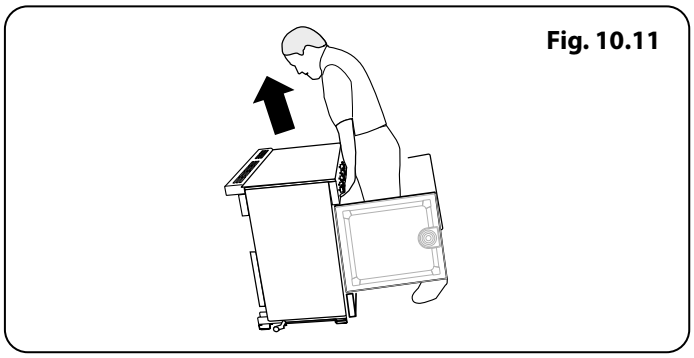

Fig. 10.11

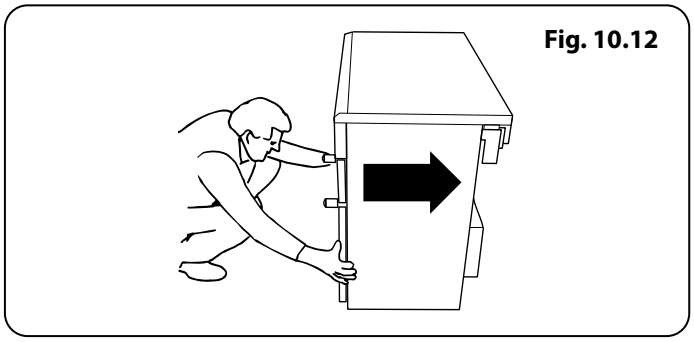

Fig. 10.12

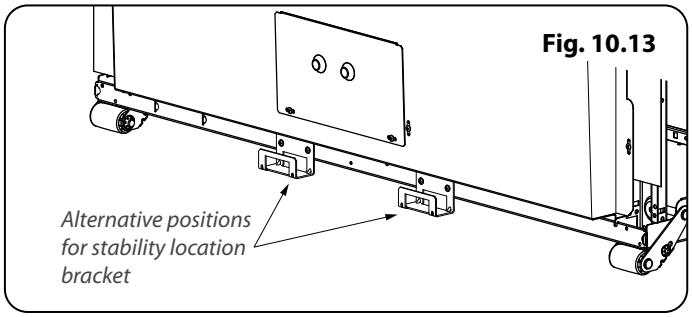

Fig. 10.13

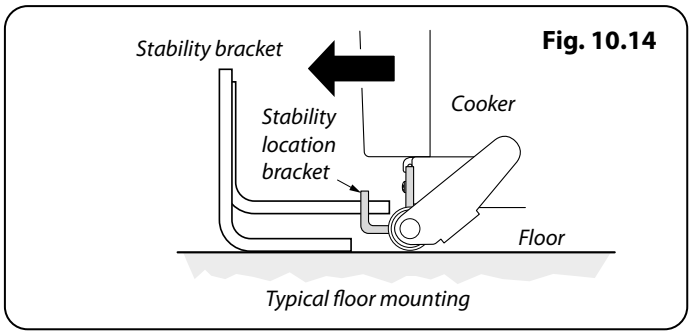

Fig. 10.14

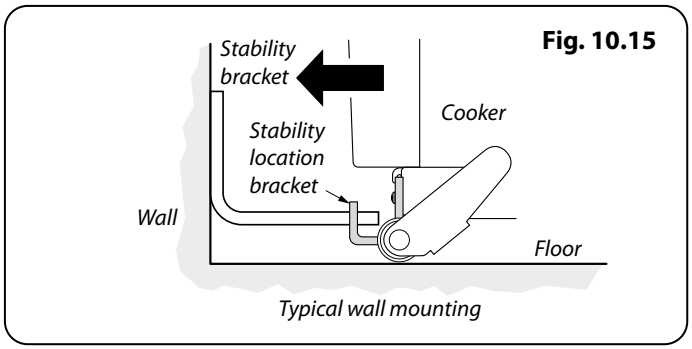

Fig. 10.15

11. Electrical connection

Have your appliance properly installed and grounded by a qualified technician. The installation must conform with local codes, or in the absence of local codes, in accordance with the National Fuel Gas Code, ANSI Z223.1/NFPA 54 or, in Canada, the Natural Gas and Propane Installation Code, CSA B149.1 and in addition the National Electrical Code NFPA 70 or the Canadian Electric Code, CSA C22.1.

Electrical requirements

For personal safety, DO NOT use an extension cord with this appliance. Remove the house fuse or open the circuit breaker before beginning installation.

WARNING Electrical Grounding Instructions. This appliance is shipped with a (four-prong) grounding plug for your protection against shock hazard and should be plugged directly into a properly grounded receptacle. DO NOT cut or remove the grounding prong from this plug.

Prior to connecting the power cord to the wall socket, inspect the cable for any damage that may have occurred. In the event of damage please consult your electrical installer.

Ensure that the power cord is routed so that it cannot become damaged during the installation.

This appliance must be supplied with the proper voltage and frequency, and connected to an individual, properly grounded branch circuit, protected by a circuit breaker or time-delay fuse, as noted on the rating plate.

Wiring must conform to National Electric Codes. If the electric service provided does not meet the above specifications, have a licensed electrician install an approved outlet.

Because range terminals are not accessible after the range is in position, flexible service conduit or cord must be used.

Provide proper electrical supply

This range must be supplied with 240 V 60 Hz, and connected to an individual, properly grounded branch circuit protected by a circuit breaker or time-delay fuse. If the electrical service provided does not meet the above specifications, it is recommended that a licensed electrician install an approved outlet.

Connecting using the supplied cord and plug

Your range is shipped with a 4-prong NEMA 14-50P plug to be used in a NEMA 14-50R receptacle.

Recommended electrical outlet location

When connecting using a NEMA 14-50R receptacle, if possible position it so it can be easily accessed.

Plug the range power cord into a properly grounded wall receptacle.

Connecting if the supplied cord and plug is not suitable.

To access the electrical connections, undo the screws and remove the electrical cover (**Fig. 11.1**).

DISCONNECT THE ELECTRICAL SUPPLY.

Fitting a 3-Wire Power Cord

Disconnect the supplied power cord from the terminal block and ground post. Keep the terminal block parts; you will need them.

Insert the new power cord through the strain relief device but do not tighten the device yet.

Your range is supplied with a ground strap that can be used when connecting to a three wire cord. Consult your electrician before changing the supplied cord kit (Fig. 11.2).

Fit the Ground strap to the ground and center terminal of the connector block (**Fig. 11.3**).

The neutral or ground wire of the power cord must be connected to the neutral terminal located in the center of the connector block. The power leads must be connected to the outside terminals (**Fig. 11.3**).

Fitting a 4-Wire Power Cord

Disconnect the supplied power cord from the terminal block and ground post. Keep the terminal block parts; you will need them.

Insert the new power cord through the strain relief device but do not tighten the device yet.

Fit the wires to the ground post and terminal block (**Fig. 11.4.**)

After fitting your 3 wire or 4 wire Power Cord

Please Torque Tighten the Two M6 Bolts within the strain relief to 1Nm to 1.2 Nm (0.74 ft-lb to 0.89 ft-lb)

DO NOT EXCEED the Stated Torque this may cause cable damage.

Final Adjustments

Make sure the connections are tight. Now tighten the strain relief device to clamp the power cord.

Refit the electrical connection cover.

Seal the Openings

Seal any openings in the wall behind the range and in the floor under the range when hookups are completed.

When all Connections are Completed

MAKE SURE THE FLOW OF COMBUSTION AND VENTILATION AIR TO THE RANGE IS UNOBSTRUCTED.

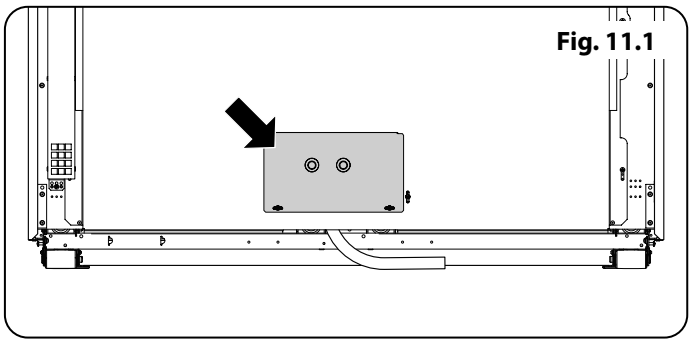
Fig. 11.1

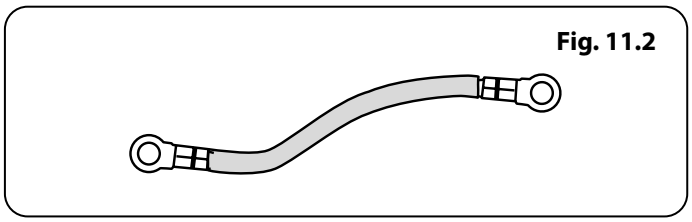
Fig. 11.2

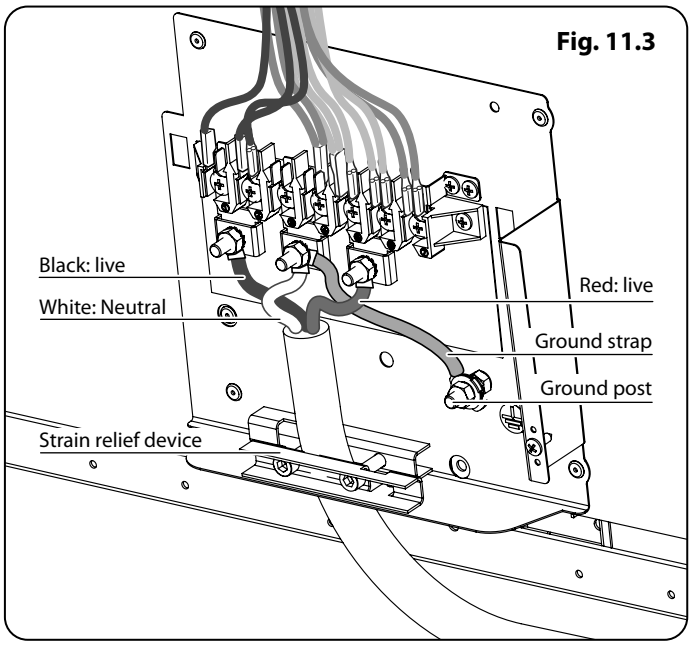

Fig. 11.3

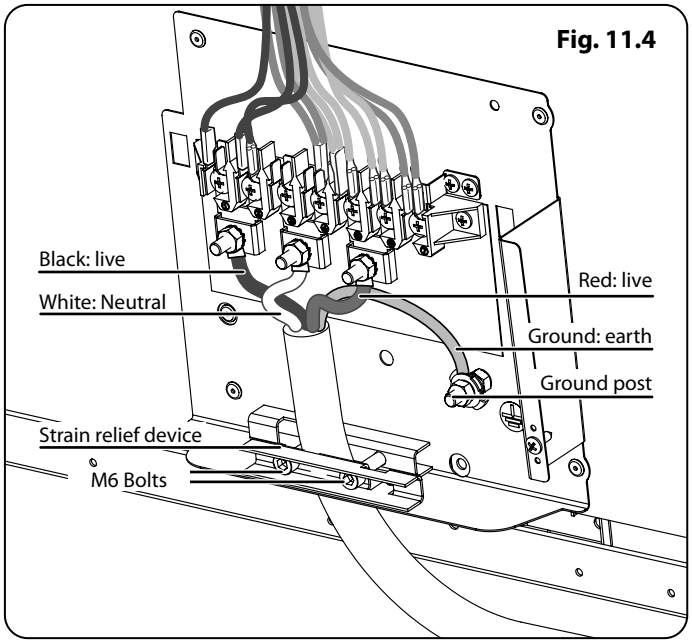

Fig. 11.4

12. Final fitting and checks

Fig. 12.1

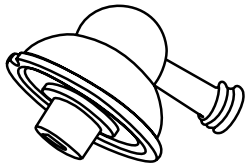

Fig. 12.2

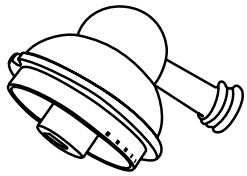

Fig. 12.3

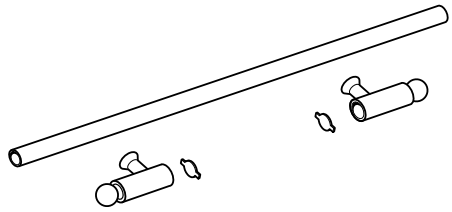

Fig. 12.4

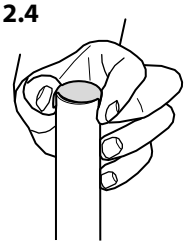

Fig. 12.5

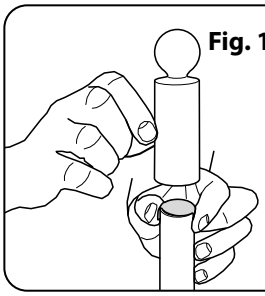

Fig. 12.6

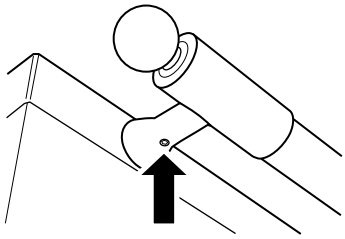

Fig. 12.7

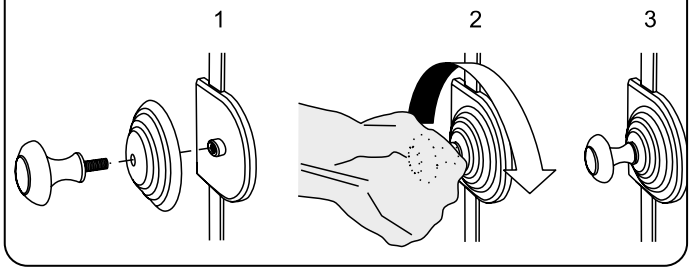

Assemble the range

Installing the control knobs

The range is supplied with 5 cooktop control knobs. These are for the induction controls to the left of the control panel (**Fig. 12.1**).

There are also 3 oven control knobs (**Fig. 12.2**).

Push the multi-function oven selector knob and temperature knob on to the control spindles at the left-hand side of the control panel.

Installing the handrail

Components (Fig. 12.3)

- 1x Hand rail tube
- 2x End cap with Allen fixing screw
- 2x Plastic friction cup

Hold a friction cup by the tabs on one end of the tube (**Fig. 12.4**).

Line up one of the end caps to the tube and push it on the tube over the friction cup (**Fig. 12.5**).

Turn the tube over and push on the other end cap using the second friction cup, making sure that you **DO NOT** scratch or damage the first end piece and confirm the two end pieces are lined up correctly.

The Allen screws should be on the underside (**Fig. 12.6**).

Installing the door handle

Attach the door knob to the door knob base and screw it to the mounting on the oven door. Hand tighten only – **DO NOT** use any tools (**Fig. 12.7**).

Installing the toe kick

Remove the 3 screws for the toe kick mounts along the bottom front edge of the range. Fasten the toe kick using these screws (alternative color screws can be found in the loose parts pack).

Final Checks

Hob Check

Check each cooking zone in turn. Be sure to use pans of the correct size and material.

Oven Check

Turn on the ovens. Check the oven fans start to turn and that the ovens heats up.

Customer Care

Installer: Please complete your details in this guide, inform the user how to operate the cooker and hand over the instructions.

Thank you.

Fitting the drawer

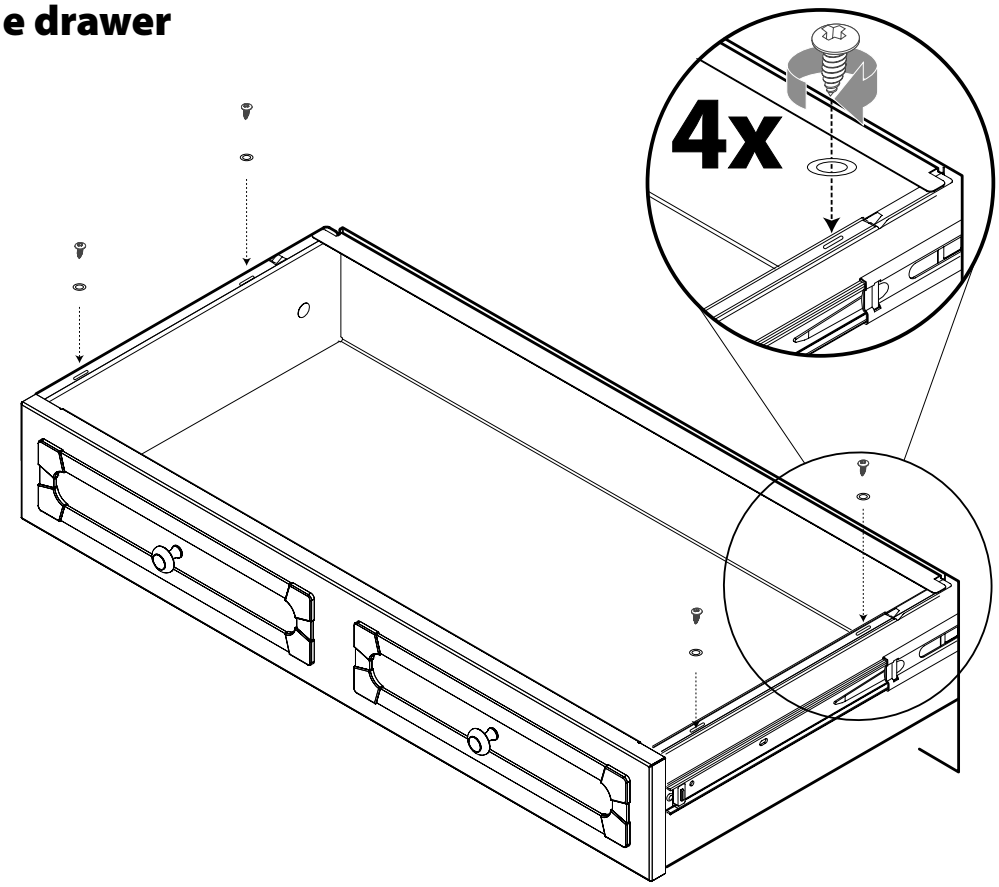

Removing the drawer

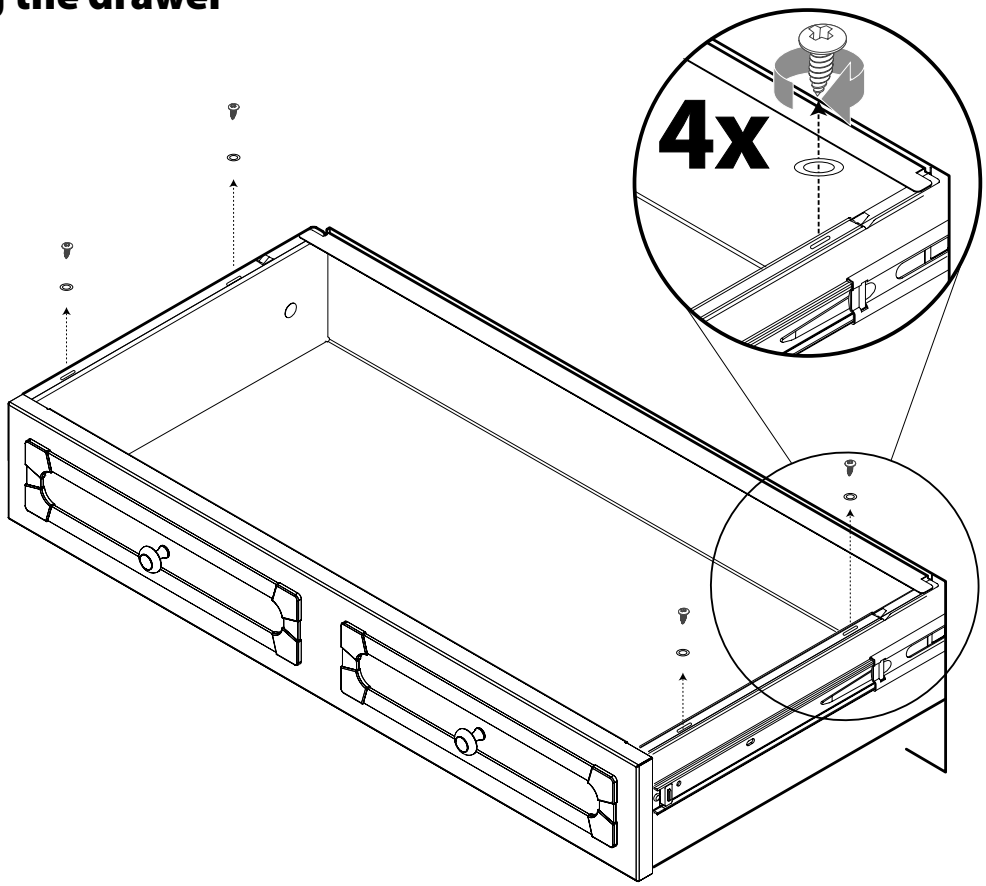

13. Circuit diagram

Induction Hob

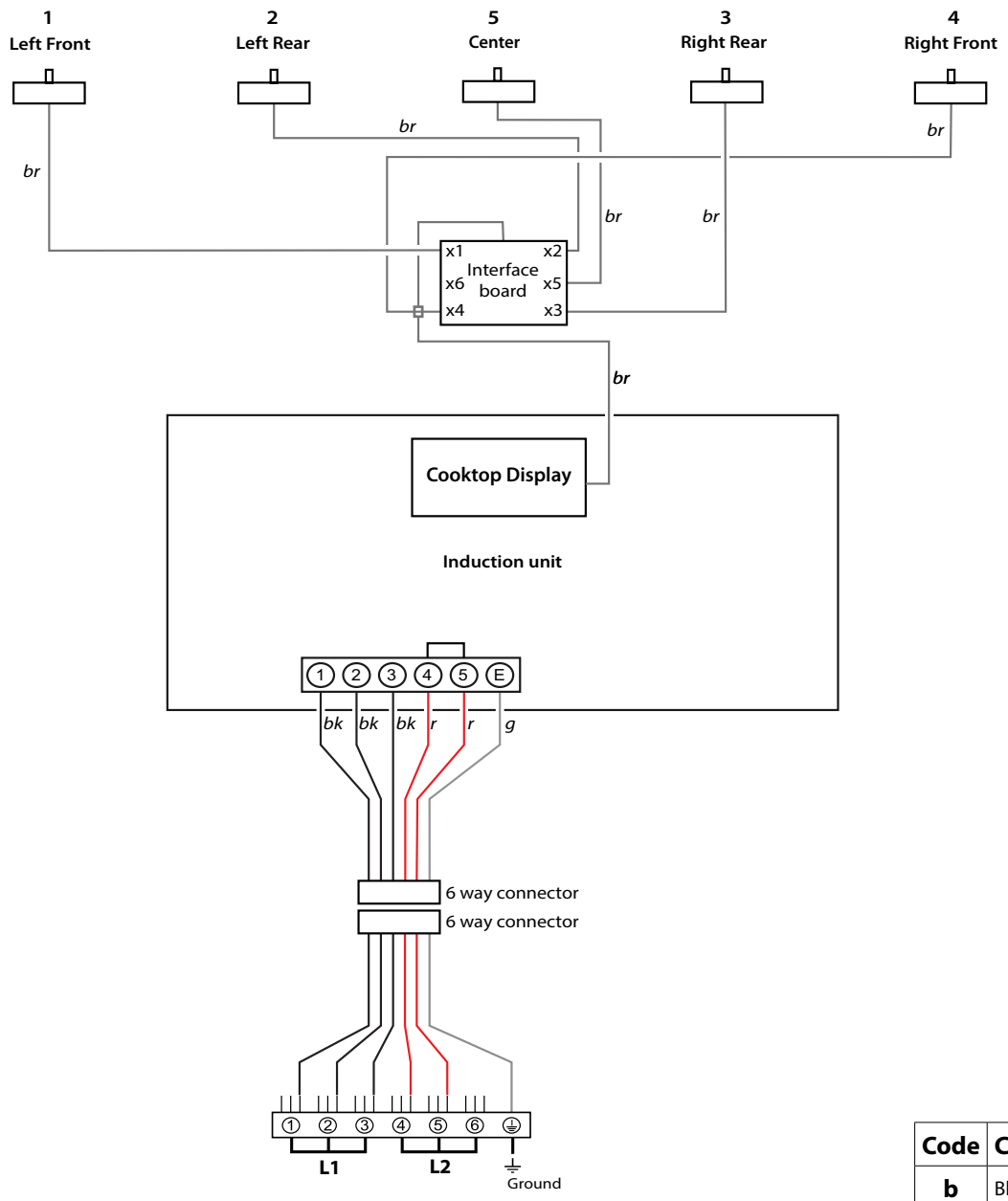

Code	Color
b	Blue
br	Brown
bk	Black
or	Orange
r	Red
v	Violet
w	White
y	Yellow
g/y	Green/yellow
gr	Gray

Oven

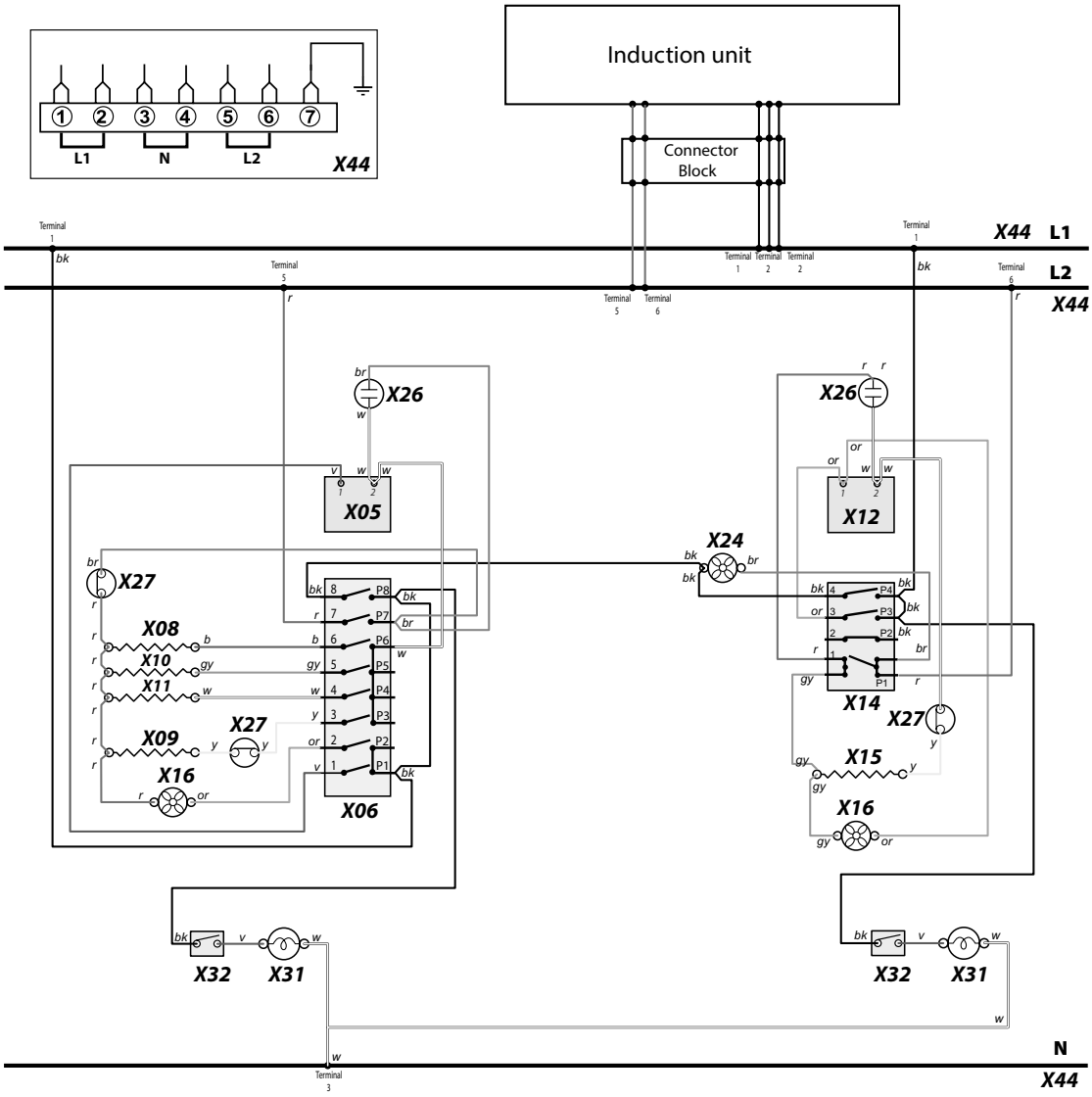

Legend

The connections shown in the circuit diagram are for single-phase. The ratings are for 240V, 60Hz; Component positions viewed from the front of the range.

Code	Description
X05	Left Hand Oven Thermostat
X06	Left Hand Oven Multifunction Switch
X08	Left Hand Oven Base Element
X09	Left Hand Oven Fan Element
X10	Left Hand Oven Top Outer Element
X11	Left Hand Oven Top Inner Element
X12	Right Hand Oven Thermostat
X14	Right Hand Oven Front Switch
X15	Right Hand Oven Fan Element
X16	Oven Fan
X24	Cooling Fan

Code	Description
X26	Neon
X27	Thermal Cut-Out
X31	Oven Light
X32	Oven Light Switch
X44	Mains Terminal Block

Code	Color
b	Blue
br	Brown
bk	Black
or	Orange
r	Red
v	Violet
w	White
y	Yellow
g/y	Green/yellow
gr	Gray

14. Technical Data

INSTALLER: Please leave these instructions with the user.

DATA BADGE LOCATION: Inside base drawer of cavity. Remove the drawer.

COUNTRY OF DESTINATION: USA, Canada

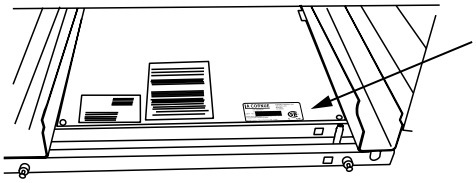

Connection

Electric Supply	240 V 60 Hz
Electric Rating	240V (2 Wire + N + Grd), 60Hz, 16.1 kW *
Branch Circuit Protection	50 A *
Connection Type	NEMA 14-50 P
Maximum total electric load 240 V (including oven fans, lights, etc.): * Load demand diversity calculation according to NFPA 70 article 220. Note: The maximum input at any time is given as both ovens fanned and broiler, plus cooling fan.	16.1 kW, (45 A)*

Dimensions

Overall height	minimum 36 1/32" (915 mm)	maximum 37 3/32" (942 mm)
Overall width	43" (1092 mm); see 'Positioning of Range'.	
Overall depth	28 19/32" (720 mm)	
Minimum space for cooktop	31 1/2" (800 mm)	
Weight (unpacked)	385 LBS (175 Kg)	

Oven ratings

Oven	Left-hand Oven	Right-hand Oven
Fan element	2.5 kW	2.5 kW
Top element	1.2 kW	-
Browning element	1.15 kW	-
Bottom element	1.0 kW	-

Cooktop ratings

Cooktop Zone	Max	Boost
Front Left	1.4 kW	2.2 kW
Rear Left	1.85 kW	3.0 kW
Center	2.3 kW	3.7 kW
Front Right	1.85 kW	3.0 kW
Rear Right	1.85 kW	3.0 kW

Oven data

Ovens	Left-hand Multi-function	Right-hand Convection
Maximum total electric load 240 V	2.5 kW	2.5 kW
Usable volume (cubic feet)	2.77	2.79

Hob data

Maximum total electric load 240 V	11.1 kW

15. Warranty

Full five-year warranty

Covers 5 years from the date of installation or date of occupancy for a new previously unoccupied dwelling.

Save your dated receipt or other evidence of the installation/ occupancy date.

La Cornue will pay for:

All repair labor and replacement parts found to be defective due to materials and workmanship.

Any damage due to transit must be reported within 15 days of delivery.

Cosmetic faults must be reported within 30 days of installation.

Service must be provided by an Authorized Service Agency during normal working hours.

For a Service Agency nearest to you, please call 877 LACORNU(e) or 877-522-6768 (7:00 am - 4:00 pm M-F Pacific time).

La Cornue will not pay for:

1. Service by an unauthorized agency or damage or repairs due to service by an unauthorized agency or use of unauthorized parts.
2. Service visits to:
   - Teach you how to use the appliance.
   - Correct the installation. You are responsible for providing electrical wiring and other connecting facilities.
   - Reset circuit breakers or replace home fuses.
   - Replace owner-accessible light bulbs.
3. Damage caused from accident, alteration, misuse, abuse, improper installation or installation not in accordance with local electrical codes or plumbing codes, or improper storage of the appliance.
4. Repairs due to other than normal home use.
5. Service labor during limited warranty period.
6. Travel fees and associated charges incurred when the product is installed in a location with limited or restricted access, (i. e. , airplane flights, ferry charges, isolated geographic regions).

Warranty applies to appliances used in residential application: it does not cover their use in commercial installations.

This warranty is for products purchased and retained in the 50 states of the USA, District of Columbia and Canada. Should the appliance be sold by the original purchaser during the warranty period, the new owner continues to be protected until the expiration date of the original purchaser's warranty period.

The warranty applies even if you should move.

LA CORNUE DOES NOT ASSUME ANY RESPONSIBILITY FOR INCIDENTAL OR CONSEQUENTIAL DAMAGES.

Some states do not allow the exclusion or limitation of incidental or consequential damages, so the above limitation or exclusion may not apply to you. This warranty gives you specific legal rights and you may also have other rights that may vary from state to state or province to province.

If you need service, first see the 'Troubleshooting' section of the instruction book. Additional help can be found by checking the 'Service and Parts' section.

La Cornue 1908

Ateliers La Cornue
14 rue du Bois du Pont
Z.I. les Béthunes
95310 Saint-Ouen l'Aumône
FRANCE
Tél. : + 33 (0)1 34 48 36 36 - Fax : + 33 (0)1 34 64 32 65
E-mail : a.table@la-cornue.com

www.la-cornue.com

USA & CANADA

Middleby Residential
4960 Golden Parkway,
Buford, GA 30518
770-932-7282

www.lacornueusa.com

AGA CONSUMER PRODUCTS